SERVICE MANUAL

BE-3D CHASSIS

MODEL	COMMANDER	DEST.	CHASSIS NO.
KV-25F1A	RM-862	Italian	SCC-K05A-A
KV-25F1B	RM-862	French	SCC-K01A-A
KV-25F1D	RM-862	AEP	SCC-K07A-A
KV-25F1E	RM-862	Spanish	SCC-K06A-A
KV-25F1U	RM-862	UK	SCC-K04A-A

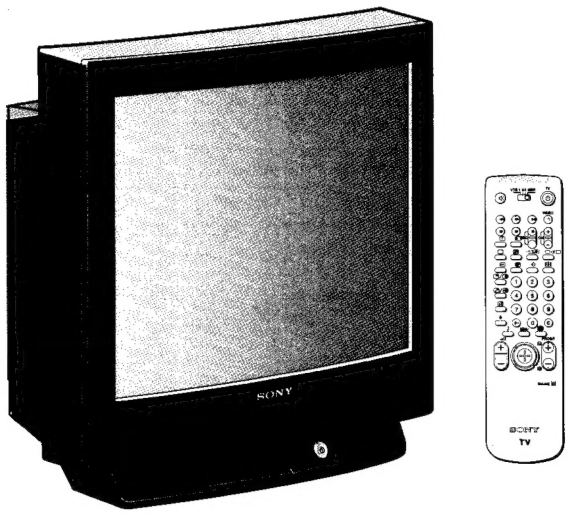

MICROFILM

TRINITRON® COLOR TV

SONY®

ITEM MODEL	Television System	Channel Coverage	Colour System
Italian	B/G/H	VHF: E2-E12, S1-S20, A-H, H1,H2 UHF: E21-E69	PAL NTSC3.58/4.43 (video input only)
French	B/G/H, D/K, L, I	L SECAM VHF: F2-F10 UHF: F21-F69 TV CABLE TV (1) VHF: B-Q UHF: S21-S44 PAL B/G/H VHF: E2-E12 UHF: E21-E69 CABLE TV (1) : S1-S41 CABLE TV (2) : S01-S05, M1-M10, U1-U10 ITALIA VHF: A-H, H1, H2 PAL I UHF: B21-B69 D/K VHF: R01-R20 UHF: B21-B69	PAL, SECAM NTSC3.58/4.43 (video input only)
AEP	B/G/H, D/K	B/G/H VHF: E2-E12 UHF: S1-S20 CABLE TV (1) : S1-S41 CABLE TV (2) : S01-S05, M1-M10, U1-U10 ITALIA VHF: A-H, H1, H2 D/K VHF: R01-R20 UHF: B21-B69	PAL, SECAM NTSC3.58/4.43 (video input only)
Spanish	B/G/H, D/K	PAL B/G/H VHF: E2-E12 UHF: E21-E69 CABLE TV (1) : S1-S41 CABLE TV (2) : S01-S05, M1-M10, U1-U10 ITALIA VHF: A-H, H1, H2 D/K VHF: R01-R20 UHF: B21-B69	PAL, SECAM NTSC3.58/4.43 (video input only)
UK	I	UHF: U21-U69	PAL NTSC3.58/4.43 (video input only)

MODEL	25F1A	25F1B	25F1D	25F1E	25F1U
Power Consumption	75W	93W	93W	93W	146W

SPECIFICATIONS

Picture Tube — Super Trinitron
Approx. 63 cm (25 inches)
(Approx. 59 cm picture measured diagonally)
110° -deflection

Rear/Front Terminals

[REAR]

1 21-pin Euro connector (CENELEC standard)
- Inputs for audio / video signals
- Inputs for RGB
- Outputs for TV audio and video signals

2/2, 21-pin Euro connector (CENELEC standard)
- Inputs for audio / video signals
- Inputs for S video
- Outputs for TV audio and video signals (selectable)

[FRONT]

3 , Video input - phono jack
3 , Audio inputs - phono jacks
3 , S video input - 4 pin DIN
Stereo minijack - headphone jack

Sound output	
Left/Right	2x15W (RMS) 2x30W (music power)
Dimensions	586x551x480 mm approx.
Weight	Approx. 32.0 kg
Supplied accessories	RM-862 Remote Commander (1) Batteries R6 (2)
Other features	Fastext, NICAM (KV-25F1B/25F1E/25F1U)

[RM-862]

Remote control system	Infrared control
Power requirements	3V dc (2 batteries) R6 (size AA)
Dimensions	Approx. 210x56x24 mm (w/h/d)
Weight	Approx. 110g (Not including battery)

Design and specifications are subject to change without notice.

Item \ Model name	KV-25F1A	KV-25F1B	KV-25F1D	KV-25F1E	KV-25F1U
Scart 1	ON	ON	ON	ON	ON
Scart 2	ON	ON	ON	ON	ON
Front in (3)	ON	ON	ON	ON	ON
RGB Priority	ON	ON	OFF	OFF	OFF
Rotation Coil	OFF	OFF	OFF	OFF	OFF
VM Set	OFF	OFF	OFF	OFF	OFF
AKB in 16:9 mode	ON	ON	ON	ON	ON
TXT	ON	ON	ON	ON	ON
FLOF	ON	ON	ON	ON	ON
TOP	ON	ON	ON	ON	ON
NICAM	OFF	ON	OFF	ON	ON
Norm B/G/H	ON	ON	ON	ON	OFF
Norm I	OFF	ON	OFF	OFF	ON
Norm D/K	OFF	ON	ON	ON	OFF
Norm IRL	OFF	OFF	OFF	OFF	OFF
Norm L	OFF	ON	OFF	OFF	OFF
Language Preset	Italian	French	German	Spanish	English

WARNING (KV-25F1U only)

The flexible mains lead is supplied connected to a **B.S. 1363** fused plug having a fuse of **5 AMP** capacity. Should the fuse need to be replaced, use a **5 AMP FUSE** approved by **ASTA** to **BS 1362**, ie one that carries the ASTA mark.
IF THE PLUG SUPPLIED WITH THIS APPLIANCE IS NOT SUITABLE FOR YOUR SOCKET OUTLETS IN YOUR HOME.
IT SHOULD BE CUT OFF AND AN APPROPRIATE PLUG FITTED.
THE PLUG SEVERED FROM THE MAINS LEAD MUST BE DESTROYED AS A PLUG WITH BARED WIRES IS DANGEROUS IF ENGAGED IN A LIVE SOCKET OUTLET.
When an alternative type of plug is used it should be fitted with a **5 AMP FUSE**, otherwise the circuit should be protected by a **5 AMP FUSE** at the distribution board.

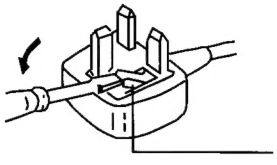

How to replace the fuse.
Open the fuse compartment with the screwdriver blade
and replace the fuse.

21 pin connector (1, 2 / 2)

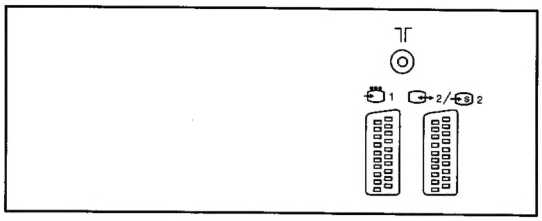

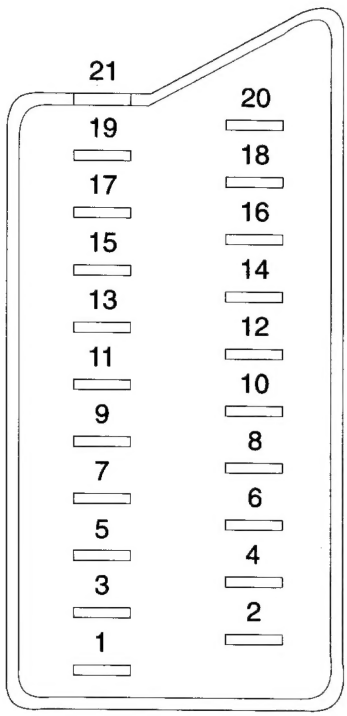

Pin No.	1	2	4	Signal	Signal Level
1	○	○	○	Audio output B (Right)	Standard level : 0.5V rms Output impedance : Less than 1k ohms*
2	○	○	○	Audio input B (Right)	Standard level : 0.5V rms Output impedance : More than 10k ohms*
3	○	○	○	Audio output A (Left)	Standard level : 0.5V rms Output impedance : Less than 1k ohm*
4	○	○	○	Ground (Audio)	
5	○	○	○	Ground (Blue)	
6	○	○	○	Audio input A (Left)	Standard level : 0.5V rms Output impedance : Less than 10k ohm*
7	○	●	●	Blue input	0.7 ± 3dB, 75 ohms, positive
8	○	○	○	Function select (AV control)	High state (9.5 - 12V) : Part mode Low state (0 - 2V) : TV mode Input impedance : More10k ohms Input capacitance : Less than 2nF
9	○	○	○	Ground (Green)	
10	○	○	○	Open	
11	○	●	●	Green	
12	○	○	○	Open	
13	○	○	○	Ground (Red)	
14	○	○	○	Ground (Blanking)	
15	○	—	—	Red input	0.7 ± 3dB, 75 ohms, positive
	—	○	○	(S signal) croma input	0.7 ± 3dB, 75 ohms, positive
16	○	●	●	Blanking input (Ys signal)	High state (1 - 3V) Low state (0 - 0.4V) Input impedance : 75 ohms
17	○	○	○	Ground (Video output)	
18	○	○	○	Ground (Video input)	
19	○	○	○	Video output	1V ± 3dB, 75ohms, positive sync : 0.3V (-3 + 10dB)
20	○	—	—	Video input	1V ± 3dB, 75ohms, positive sync : 0.3V (-3 + 10dB)
	—	○	○	Video input Y (S signal)	1V ± 3dB, 75ohms, positive sync : 0.3V (-3 + 10dB)
21	○	○	○	Common ground (plug, sheild)	

○ Connected ● Not Connected (Open) * at 20Hz - 20kHz

Pin No.	Signal	Signal Level
1	Ground	
2	Ground	
3	Y (S signal) input	1V ± 3dB 75 ohm, positive Sync. 0.3V -3 + 10dB
4	C (S signal) input	0.3V ± 3dB 75ohm, positive Sync.

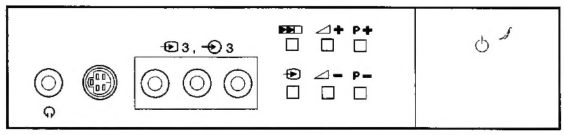

TABLE OF CONTENTS

Section	Title	Page
1. GENERAL		
	Overview	7
	Getting Started	8
	TV Operation	9
	Advanced Operations	10
	Teletext	16
	Optional Equipment	17
	For Your Information	19
2. DISASSEMBLY		
2-1.	Rear Cover Removal	20
2-2.	Chassis Assy Removal	20
2-3-1.	Service Position (1)	20
2-3-2.	Service Position (2)	20
2-4.	Wire Dressing	21
2-5.	A Board Removal	21
2-6.	Extension Board	21
2-7.	Picture Tube Removal	22
3. SET-UP ADJUSTMENTS		
3-1.	Beam Landing	23
3-2.	Convergence	24
3-3.	White Balance	26
4. CIRCUIT ADJUSTMENTS		
4-1.	Electrical Adjustments	27
4-2.	Test Mode 2 :	30
4-3.	BE-3D Self Diagnostic Software	31
5. DIAGRAMS		
5-1.	Block Diagrams	33
5-2.	Circuit Boards Location	38
5-3.	Schematic Diagrams and Printed Wiring Boards	38
	*D Board	43
	*A Board	48
	*C Board	58
	*IF Block [VIF (AEP), VIF (UK)]	61
	*IF Block [VIF (FR)]	61
	IC Blocks	63
5-4.	Semiconductors	65
6. EXPLODED VIEWS		
6-1.	Chassis	67
6-2.	Picture Tube	68
7. ELECTRICAL PARTS LIST		69

CAUTION

SHORT CIRCUIT THE ANODE OF THE PICTURE TUBE AND THE ANODE CAP TO THE METAL CHASSIS, CRT SHIELD, OR CARBON PAINTED ON THE CRT, AFTER REMOVING THE ANODE.

WARNING !!

AN ISOLATION TRANSFORMER SHOULD BE USED DURING ANY SERVICE TO AVOID POSSIBLE SHOCK HAZARD, BECAUSE OF LIVE CHASSIS.
THE CHASSIS OF THIS RECEIVER IS DIRECTLY CONNECTED TO THE AC POWER LINE.

SAFETY-RELATED COMPONENT WARNING!!

COMPONENTS IDENTIFIED BY SHADING AND MARK ⚠ ON THE SCHEMATIC DIAGRAMS, EXPLODED VIEWS AND, IN THE PARTS LIST ARE CRITICAL FOR SAFE OPERATION. REPLACE THESE COMPONENTS WITH SONY PARTS WHOSE PART NUMBERS APPEAR AS SHOWN IN THIS MANUAL OR IN SUPPLEMENTS PUBLISHED BY SONY.

ATTENTION

APRES AVOIR DECONNECTE LE CAP DE L'ANODE, COURT-CIRCUITER L'ANODE DU TUBE CATHODIQUE ET CELUI DE L'ANODE DU CAP AU CHASSIS METALLIQUE DE L'APPAREIL, OU AU COUCHE DE CARBONE PEINTE SUR LE TUBE CATHODIQUE OU AU BLINDAGE DU TUBE CATHODIQUE.

ATTENTION !!

AFIN D'EVITER TOUT RISQUE D'ELECTROCUTION PROVENANT D'UN CHÁSSIS SOUS TENSION, UN TRANSFORMATEUR D'ISOLEMENT DOIT ETRE UTILISÉ LORS DE TOUT DÉPANNAGE.
LE CHÁSSIS DE CE RÉCEPTEUR EST DIRECTEMENT RACCORDÉ À L'ALIMENTATION SECTEUR.

ATTENTION AUX COMPOSANTS RELATIFS À LA SÉCURITÉ!!

LES COMPOSANTS IDENTIFIÈS PAR UNE TRAME ET PAR UNE MARQUE ⚠ SUR LES VUES EXPLOSÉES ET LES LISTES DE PIECES SONT D'UNE IMPORTANCE CRITIQUE PUR LA SÉCURITÉ DU FONCTIONNEMENT. NE LES REMPLACER QUE PAR DES COMPOSANTS SONY DONT LE NUMÉRO DE PIÉCE EST INDIQUÉ DANS LE PRÉSENT MANUEL OU DANS DES SUPPLÉMENTS PUBLIÉS PAR SONY.

SECTION 1 GENERAL

The operating instructions mentioned here are partial abstracts from the Operating Instruction Manual. The page numbers of the Operating Instruction Manual remain as in the manual.

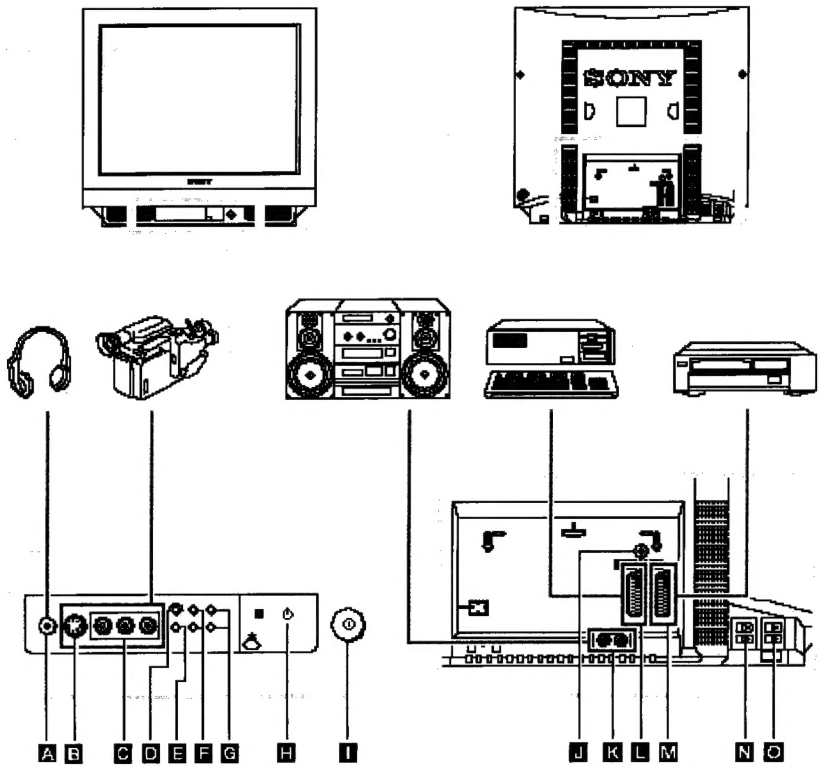

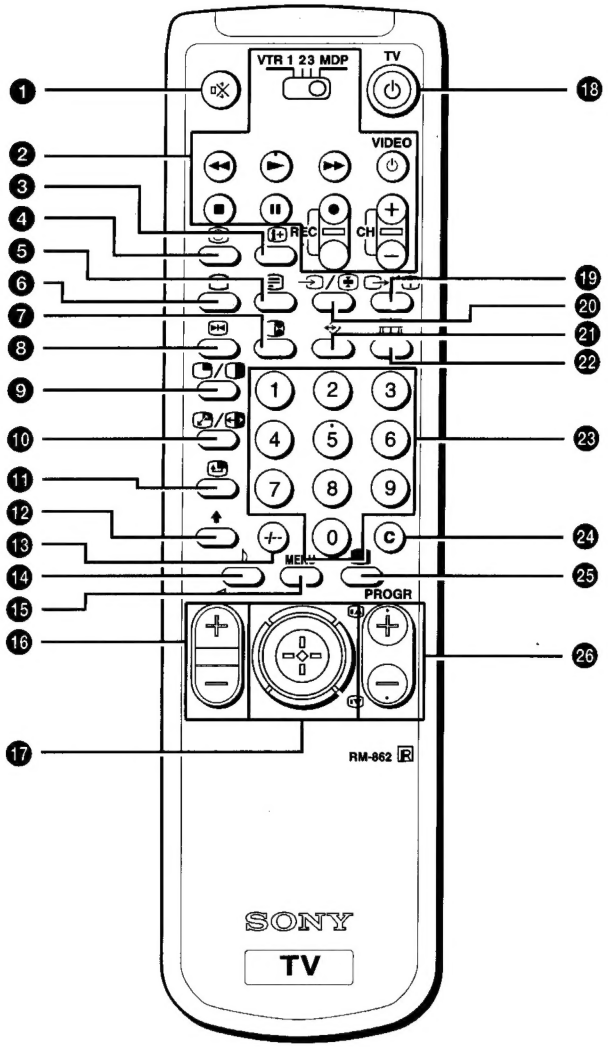

Overview

This section briefly describes the controls and the buttons on the TV set and on the Remote Commander. Please open the flap at the front of the Instruction manual for illustrations of the TV set and the Remote Commander. Letters in boxes refer to the buttons on the TV set, numbers in circles to the buttons on the Remote Commander. For more information, refer to the page numbers given next to each description.

TV buttons and Terminals

Reference and Symbol	Name	Refer to Page
Front of the set		
A ∩	Headphones jack	4
B S 3	S video input jack	33
C 3, 3	Audio/video input jacks	33
D ▶▶|	Automatic Preset button	12
E	Input mode button	14
F +/-	Volume control	13
G P+/-	Programme button	13
H ⏻	Standby mode indicator	13
I ⏻	Main power switch	13
Rear of the set		
J	Aerial socket	11
K	Audio phono jacks	33
L 1	21 pin Euro connector	33
M 2/S 2	21 pin Euro connector	33
N L/G/S/I, R/D/D/D	Left/Right speaker terminals (KV-25F2U, 29F2U only)	10
O S	Surround speaker terminals (KV-25F2U, 29F2U only)	10

Remote Commander Operation

Reference and Symbol	Name	Refer to Page
❶	Muting on/off button	13
❷	**VCR operation**	36
VTR123MDP	Video equipment selector	
◀◀ ▶ ▶▶ ■ ❚❚ ●	Video equipment operation buttons	
VIDEO ⏻, CH +/-		
❸	On-screen display button	13
❹	Time display button	13
❺	Teletext button	14
❻	TV power on/TV mode button	13, 14
❼❽❾❿⓫⓬	No function on this set	-
⓭ -/--	Double digit entering button	13
⓮	Sound mode button	20
⓯ **MENU**	Menu on/off button	15
⓰ +/-	Volume control button	13
⓱	Joystick for menu selection. Press to confirm selection (OK function)	15
⓲ TV⏻	TV standby button	13
⓳	Teletext: reveal button	31
⓴ /	Input mode button	14, 31
	Teletext: Freezing the subpage	
㉑	Teletext: Favourite pages button	32
㉒	Button to change screen format	13
㉓ 1, 2, ... 9, 0	Number buttons	13
㉔ **C**	Direct channel button	14
㉕	Picture mode button	20
㉖ **PROGR +/-**	Programme buttons Teletext: Page up/page down buttons	13, 14

Step 2

Connecting the Aerial

(If you connect a VCR, skip to step 3)

Insert the aerial plug tightly into the aerial socket ⊓ J. Use a good-quality aerial cable (not supplied), corresponding to the relevant regulations.

Step 3

Connecting a VCR

We recommend that you tune in the VCR signal to programme number "0". For details, see "Presetting Channels Manually" on page 17.

See "Connecting Optional Equipment" on page 33 for more information.

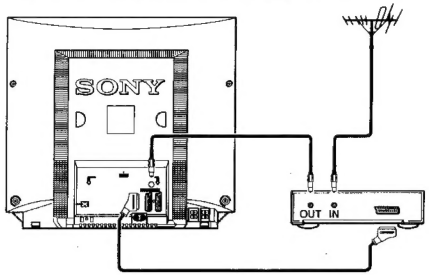

Step 4

Inserting the Batteries Into the Remote Commander

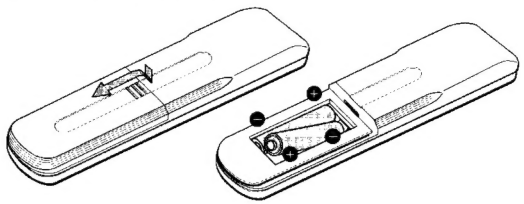

Respect your environment! Dispose of used batteries in an environmentally friendly way.

Step 5

Presetting Channels Automatically

With this function, the TV can automatically search and store up to 100 different channel numbers.

If you prefer manual presetting, refer to "Presetting Channels Manually" on page 17.

1 Plug into mains.
Press the power switch ⏻ I on the TV set.

2 Press and hold the button ⏭ D on the TV set until the automatic menu is displayed and the search starts.

After all available channels are stored, the normal TV picture is shown.

Note: Channels are automatically stored as follows:

Programme 1	BBC1
Programme 2	BBC2
Programme 3	ITV
Programme 4	CH4 or S4C

TV Operation

This section explains functions used whilst watching TV. Most operations are carried out using the remote commander (numbers in circles). All basic functions are also available on the TV set (letters in boxes). Open the flap at the front of the Instruction Manual to see the illustrations of the Remote Commander and the TV set.

To	Press
Switch on	U I on TV
Switch off temporarily	⏻ ⓲ TV is now in standby mode and ⏻ **H** indicator on TV lights up.
Switch on from standby mode	▭ ❻, PROGR +/- ㉖ **G** or any number button ㉓
Switch off completely	⏻ **I** on TV To save energy, switch off your TV completely when TV is not in use.
Select programmes	PROGR +/- ㉖ **G** or number buttons ㉓ For double digit number, press -/- - ⓭ then the number e.g. For 23, press -/- - ⓭ then 2 and 3.
Display on screen indications	ⓘ ❸. Press again to make the indications disappear.
Adjust the volume	◿ ⓰ **F** + or -
Mute the sound	🔇 ❶. Press again to restore the sound.
Display the time (only available when teletext is broadcast)	🕘 ❹. Press again to make the display disappear.
View programmes in 16:9 mode	▭ ㉒. Press again to return to 4:3 mode.

To	Press
Tune in a channel temporarily	C ㉔. The indication "C" appears.
View video input picture (see page 34 for detailed information)	⇨ ⓴ **E** repeatedly until the desired video input appears. Press ▭ ❻ to restore the TV picture.
View teletext (see page 31 for detailed information)	
Switch on	☰ ❺
Select a page	three number buttons ㉓ or ▤▲ ㉕ (for next page) or ▤▼ ㉖ (for previous page).
Use fastext	Push joystick ⓱ to select a colour.
Switch off	▭ ❻

Adjusting and Setting the TV Using the Menu

You can adjust and set various functions on the TV using the following remote commander buttons:

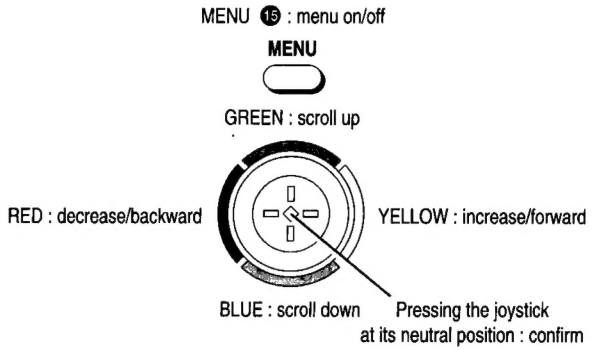

Choosing the Menu Language

This function enables you to change the language of the menu screens.

1 Press power switch ⏻ I on the TV. If the standby indicator ⏻ H on the TV is lit, press ▭ ⑥ or a number button ㉓ on the Remote Commander.

2 Press the MENU button ⑮ on the remote commander.

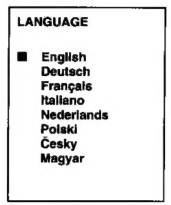

3 Push to blue or green to select the language you want then push to yellow.

4 Press the MENU button ⑮ to restore the normal TV picture.

Presetting Channels Automatically

You may have already preset the channels automatically by using the method shown on page 12. You can also preset channels automatically by using the remote commander as follows:

1 Press the MENU button ⑮.

2 Push joystick ⑰ to blue or green to select the symbol 🧰 on the menu screen then push to yellow.

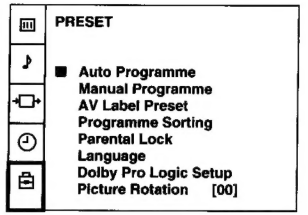

3 Push to blue or green to select 'Auto Programme'.

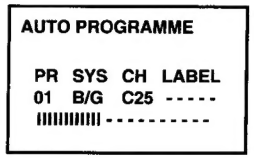

4 Push to yellow and hold until the automatic menu is displayed and the search starts.
After all available channels have been preset, the normal TV picture is shown.

Note: Channels are automatically stored as follows:

Programme 1	BBC1
Programme 2	BBC2
Programme 3	ITV
Programme 4	CH4 or S4C

Presetting Channels Manually

This function enables you to preset channels one by one to different programme numbers. This is also convenient for allocating programme numbers to various video input sources.

1 Press the MENU button ⓯.

2 Push joystick ⓱ to blue or green to select the symbol 🧰 on the menu screen then push to yellow.

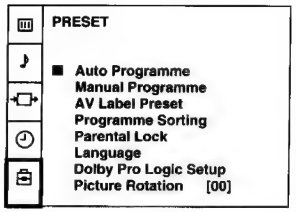

3 Push to blue or green to select 'Manual Programme' then push to yellow .

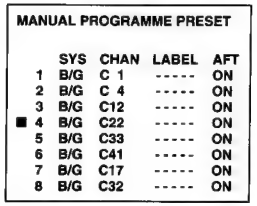

4 Push to blue or green to select on which programme number you want to preset a channel then push to yellow.

5 Push to blue or green to select the TV broadcast system (I) or a video input source (AV1, AV2,...) then push to yellow.

6 Select the first number digit of 'CHAN' then the second number digit of 'CHAN' with the number buttons ㉓ on the remote commander

or

Push joystick ⓱ to blue or green to search for the next available channel number.

7 If you want to store the channel number, go to step 8. If not, select a new channel number using the number buttons ㉓ on the remote commander or push to blue or green to resume the search.

8 Press the joystick ⓱.

9 Repeat steps 4 to 8 to preset other channels.

10 Press the MENU button ⓯ to restore the normal TV picture.

Adjusting the Picture and Sound

Although the picture and sound are adjusted at the factory, you can adjust them to suit your own taste.

1 Press the MENU button ⓯.

2 Push joystick ⓱ to blue or green to select for picture control or ♪ for sound control then push to yellow.

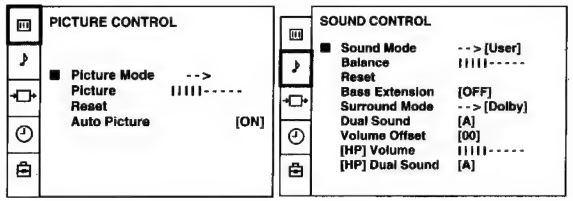

3 Push to blue or green to select the desired item then push to yellow.

4 Push to red or yellow to alter the item then press the joystick ⓱.
For the effect of each control, see the following tables.

5 Repeat steps 3 and 4 to adjust the other items.

6 Press the MENU button ⓯ to restore the normal TV picture.

PICTURE CONTROL	Effect
Picture Mode	User —> Game —> Movie —> Sports —> Live In 'User' mode, you can preset Brightness, Colour, Sharpness and Hue (NTSC signals only) as follows: **1** Push joystick ⓱ to blue or green to select the desired item then push to yellow. **2** Push to red or yellow to adjust then press the joystick ⓱. **3** Push to red to return to the PICTURE CONTROL menu.
Contrast	Darker —— I —— Brighter
Reset	Resets picture to the factory preset levels.
Auto Picture	All the picture levels automatically change according to the surrounding lighting level. (Auto Picture Control)
Format	Wide screen effect (16:9)

SOUND CONTROL	Effect
Sound Mode	User —> Rock —> Jazz —> Pop In 'User' mode, you can preset Treble and Bass as follows. **1** Push joystick ⓱ to blue or green to select the item then push to yellow. **2** Push to red or yellow to adjust then press the joystick ⓱. **3** Push to red to return to the 'SOUND CONTROL' menu.
Balance	Left —— I —— Right
Reset	Resets sound to the factory preset levels.
Spatial	Pro Logic —> Pseudo Stereo —> Spatial —> Club —> Theatre—> Hall —> Church —> Stadium —> Off Acoustic sound effect
Dual Sound	A: Left channel —> B: Right channel —> stereo —> mono
Volume Offset	Presets the volume level for individual programmes. -12 —— 0 —— +12
∩ Volume	Adjusts the headphone volume.
∩ Dual Sound	Presets the headphone channels. A: Left channel —> B: Right channel —> stereo —> mono

Changing Modes Quickly

You can quickly change the Sound Mode, or the Picture Mode without entering the 'SOUND CONTROL' or the 'PICTURE CONTROL' menu.

1 Press ■ ㉕ for the picture or ♪ ⓮ for the sound.

2 Push joystick ⓱ to blue or green to select the desired mode then push to yellow.

3 Press ■ ㉕ or ♪ ⓮ again to restore the normal TV screen.

Manual Fine-Tuning

Normally, the automatic fine-tuning (AFT) function is operating.

If the picture is distorted however, you can manually fine-tune the TV to obtain a better picture reception.

1 Press the MENU button ⓯.

2 Push joystick ⓱ to blue or green to select the symbol 🧰 on the menu screen then push to yellow.

3 Push to blue or green to select 'Manual Programme' then push to yellow.

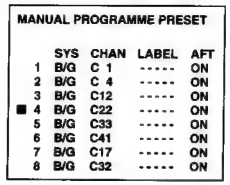

4 Push to blue or green to select the programme number which corresponds to the channel you want to manually fine-tune.

5 Push to yellow repeatedly until the AFT position changes colour..

6 Push to blue or green to change the frequency of the channel from -15 to +15.

7 Press the joystick ⓱.

8 Repeat steps 4 to 7 to fine-tune other channels.

9 Press the MENU button ⓯ to restore the normal TV picture.

Sorting Programme Positions

This function enables you to move channels to different programme numbers.

1 Press the MENU button ⓯.

2 Push joystick ⓱ to blue or green to select the symbol 🧰 on the menu screen then push to yellow.

3 Push to blue or green to select 'Programme Sorting' then push to yellow .

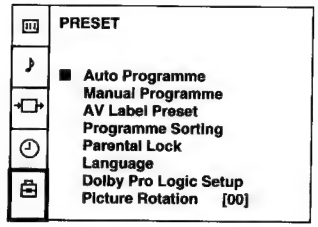

4 Push to blue or green to select the channel you want to move to another programme number then push to yellow.

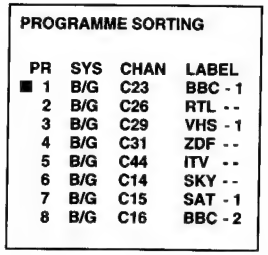

5 Push to blue or green to select the programme number to which you want to move the channel selected in step 4 then push to yellow.

6 Repeat steps 4 to 5 if you wish to move other channels to different programme numbers.

7 Press the MENU button ⓯ to restore the normal TV picture.

Using Parental Lock

This function enables you to prevent undesirable broadcasts from appearing on the screen. We suggest you use this function to prevent children from watching programmes which you consider unsuitable.

1 Press the MENU button ⓯.

2 Push joystick ⓱ to blue or green to select the symbol 🧰 on the menu screen then push to yellow.

3 Push to blue or green to select 'Parental Lock' then push to yellow.

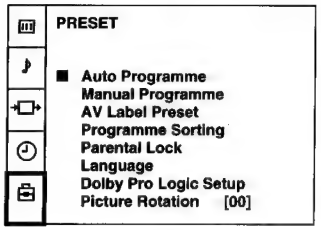

4 Push to blue or green to select the channel you want to block then push to yellow.
The symbol appears before the programme number to indicate that this channel is now blocked.

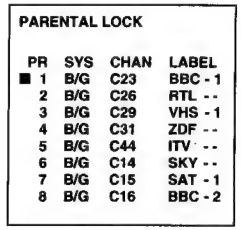

5 Repeat step 4 if you wish to block other channels.

6 Press the MENU button ⓯ to restore the normal TV picture.

Note: To unblock, push to yellow after selecting the channel to unblock in the 'Parental Lock' menu.

Using the Sleep Timer

This function enables you to select a time period after which the TV automatically switches into standby mode.

1 Press the MENU button ⓯.

2 Push joystick ⓱ to blue or green to select the symbol 🕘 on the menu screen then push to yellow.

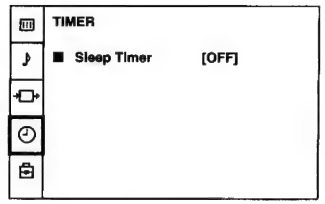

3 Push to yellow.

4 Push to red or yellow to set time delay and press the joystick ⓱.

OFF 0:30 1:00 1:30 ..... 3:30 4:00

One minute before the TV switches into standby mode, a message is displayed on the screen.

5 Press the MENU button ⓯ to restore the normal TV picture.

Skipping Programme Positions

This function enables you to skip unused channels when selecting programme numbers with the PROGR+/- buttons. However, you can still watch the skipped channel(s) by using the number buttons.

1 Press the MENU button ⓯.

2 Push joystick ⓱ to blue or green to select the symbol 🧰 on the menu screen then push to yellow.

3 Push to blue or green to select 'Manual Programme' then push to yellow.

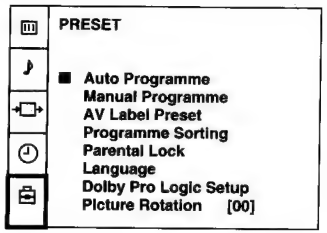

4 Push to blue or green to select the channel you want to skip then push to yellow.

5 Push to blue or green until '- - -' appears in the 'SYS' position.

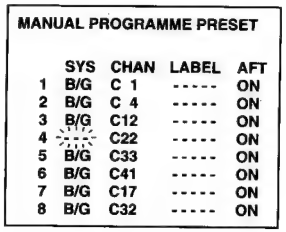

6 Press the joystick ⓱.

7 Repeat steps 4 to 6 to skip other channels.

8 Press the MENU button ⓯ to restore the normal TV picture.

Captioning a Station Name

Names for channels are usually automatically taken from teletext if available. You can however name a channel or an input video source using up to five characters (letters or numbers).

1 Press the MENU button ⓯.

2 Push joystick ⓱ to blue or green to select the symbol 🧰 on the menu screen then push to yellow.

3 Push to blue or green to select 'Manual Programme' then push to yellow.

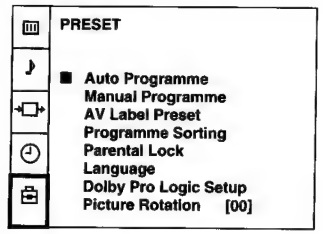

4 Push to blue or green to select the channel you wish to caption then push to yellow repeatedly until the first element of the 'LABEL' position is highlighted.

5 Push to blue or green to select a letter or number and push to yellow (select '-' for a blank). Select other characters in the same way.

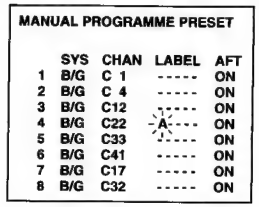

6 After selecting all the characters, press the joystick ⓱.

7 Repeat steps 4 to 6 to caption names for other channels.

8 Press the MENU button ⓯ to restore the normal TV screen.

Most TV channels broadcast information via teletext. The index page of the broadcaster (usually page 100) gives you information on how to use the service.
Make sure you use a TV channel with a strong signal, otherwise teletext errors may occur.

Switching Teletext on and off

1 Select the channel which carries the teletext service you wish to view.

2 Press ⊜ ❺ to display teletext.
If no teletext signal is broadcast, the indication P100 is displayed on a black screen.

3 Input three digits for the page number using the number buttons ㉓.
The page counter searches for the page and after some seconds the page is displayed.

4 Press ▢ ❻ to return to the normal TV picture.

Using Other Teletext Functions

To	Press
Access the next or preceding teletext page	⊜▲ ㉖ for the next page or ⊜▼ ㉖ for the preceding page
Mix the mode	⊜ ❺ when in teletext mode. Now the teletext page is superimposed on the TV programme. Press again to return to the normal teletext display.
Freeze a teletext subpage	⊕ ⑳. Press once again to cancel.
Reveal hidden information (eg: answers to a quiz)	? ⑲. Press once again to cancel.

Favourite page system

You can store up to four of your favourite teletext pages per Teletext service. In this way you have quick access to the pages you frequently use.

Storing pages

1 Use the number buttons ㉓ to select the page you would like to store.

2 Press ⇳ ㉑ twice.
The colour prompts at the bottom of the screen flash.

3 Push the joystick ⑰ to store the selected page.
The page is now stored on this colour.

Repeat steps 1 to 3 for the other 3 pages.

Displaying the Favourite Pages

1 Press ⇳ ㉑.

2 Push the joystick ⑰ to the colour on which the desired page is stored.

Make sure you press ⇳ ㉑, otherwise the normal Fastext facility operates.

Using Fastext

(only available, if the TV station broadcasts Fastext signals)

With Fastext you can access pages with one key stroke . When Fastext is broadcast, a colour-coded menu appears at the bottom of the screen. The colours of this menu correspond to the red, green, yellow and blue marks on the Remote Commander.

Push the joystick ⑰ to the colour mark which corresponds to the colour-coded menu. The page is displayed after some seconds.

Connecting Optional Equipment

There is a wide range of optional equipment you can connect to your TV. Refer to the illustrations on the front flap page of this manual.

Symbol	Acceptable input signals	Available output signals
1 L	Normal audio/video and RGB	Audio/video from TV tuner
2/S 2 M	Normal audio/video and S video source	Audio/video from selected
3, 3 B S 3 C	Normal audio/video and S video	No output
K	No inputs Audio from selected source.	

About S video input

Video signals may be separated into Y (luminance) and C (chrominance) signals. Separating the two signals prevents interference and thus improves the picture quality.

Notes on connections:

If the picture or sound is distorted, move the VCR away from the TV.

When connecting a monaural VCR, connect only the white jack to both the TV and VCR.

Selecting Input and Output Signals

This section explains how to view the video input picture and how to select the output signal. You can use direct access buttons 20 E to select the input or the menu system to select input and output.

Selecting With Direct Access Buttons

Press 20 E repeatedly .
Press 6 to restore the normal TV picture.

Symbol on the screen	Input Signal
1	Audio/video through Euro AV connector L
	RGB through Euro AV connector L
2	Audio/video through Euro AV connector M
S 2	S video through Euro AV connector M
3	Audio/video through the phono jacks C
S 3	S video through the phono jacks B

Selecting With the Video Connection Menu

1 Press the MENU button 15.

2 Push joystick 17 to blue or green to select for "Video Connection" then push to yellow.

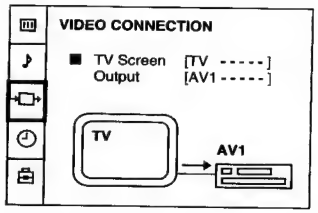

3 Push to blue or green to select input or output then push to yellow 17.

4 Push to blue or green repeatedly to select the desired input or output source then press the joystick 17.

5 Press the MENU button 15 to restore the normal TV picture.

Note: If you select 'Auto'for output, the output source automatically becomes the same as the desired input source.

Using AV Label Preset

This function enables you to label the input sources using up to five characters (letters or numbers).

1 Press the MENU button ⓯.

2 Push joystick ⓱ to blue or green to select the symbol 🧰 on the screen then push to yellow.

3 Push to blue or green to select 'AV Label Preset' then push to yellow.

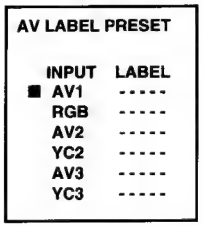

4 Push to blue or green to select the desired input source then push to yellow.

5 Push to blue or green to select a letter or number then push to yellow (select '-' for a blank).
Select other characters in the same way.

6 After selecting all the characters, press the joystick ⓱.

7 Repeat steps 4 to 6 label other input sources.

8 Press the MENU button ⓯ to restore the normal TV screen.

Remote Control of Other Sony Equipment

You can control other Sony remote controlled equipment using the buttons ❷ on the Remote Commander.

1 Set the VTR 1/2/3 MDP selector according to the equipment
VTR 1: Beta VCR
VTR 2: 8mm VCR
VTR 3: VHS VCR
MDP: Video Disk Player

2 Use the buttons ❷ to operate the equipment.

Notes:
- If your video equipment has a COMMAND MODE selector, set this selector to the same position as the VTR 1/2/3 MDP selector on the TV Remote Commander
- If the equipment does not have a certain function, the corresponding button on the Remote Commander does not work.

Troubleshooting

Here are some simple solutions to the problems which affect the picture and sound.

Problem	Solution
No picture (screen is dark), no sound	• Plug the TV in. • Press ⏻ I on the TV. (If ⏻ indicator H is on, press ▭ 6 or a programme number 23 on the Remote Commander.) • Check the aerial connection. • Check if the selected video source is on. • Turn the TV off for 3 or 4 seconds then turn it on again using ⏻ I.
Poor or no picture (screen is dark), but good sound	• Press MENU 15 to enter the 'PICTURE CONTROL' menu and adjust 'Picture', 'Brightness' and 'Colour'.
Poor picture quality when watching an RGB video source.	• Press ⇨ 20 E repeatedly to select ⇨.
Good picture but no sound	• Press + 16 F. • If 🔇 is displayed on the screen, press 🔇 1.
No colour for colour programmes	• Press MENU 15 to enter the 'PICTURE CONTROL' menu, select 'Reset' then press the joystick 17.
Remote Commander does not function.	• Replace the batteries

If you continue to have problems, have your TV serviced by qualified personnel. Never open the casing yourself.

SECTION 2
DISASSEMBLY

2-1. REAR COVER REMOVAL

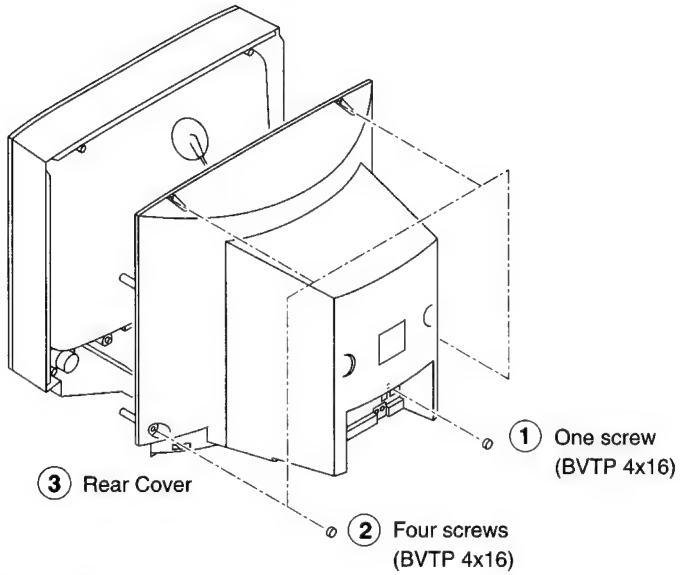

2-2. CHASSIS ASSY REMOVAL

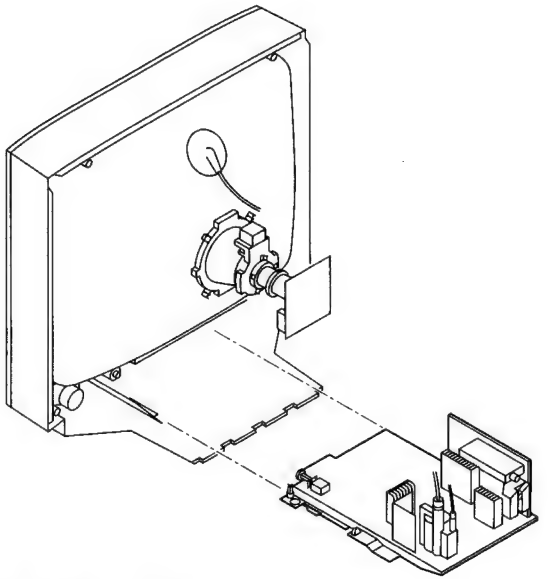

2-3-1. SERVICE POSITION (1)

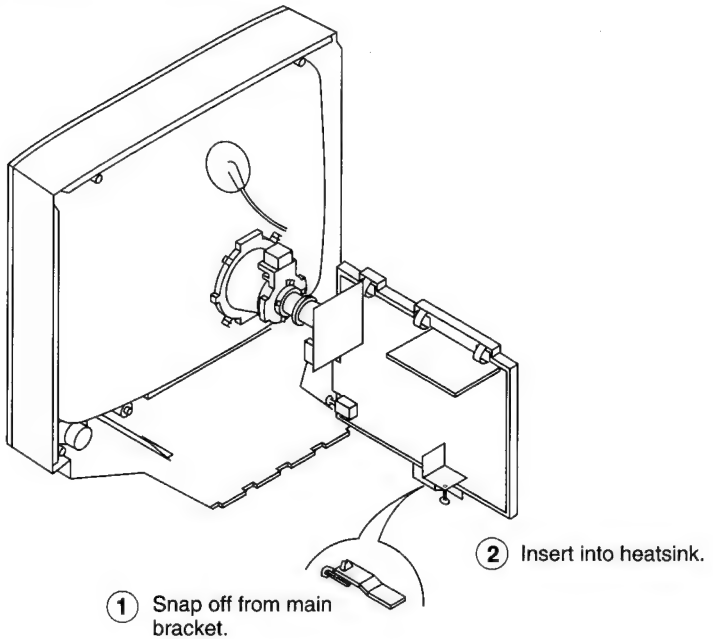

2-3-2. SERVICE POSITION (2)

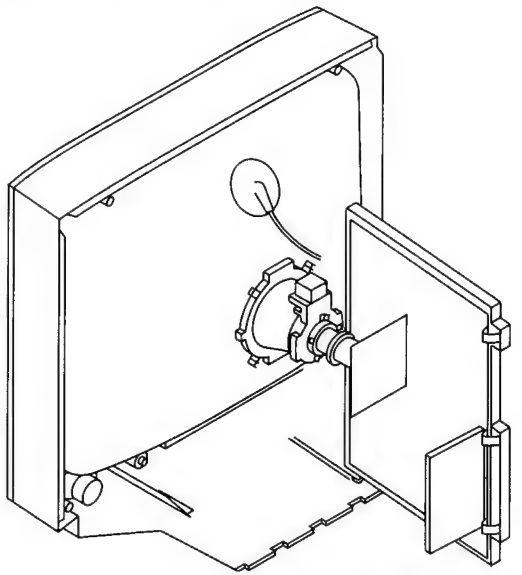

2-4. WIRE DRESSING

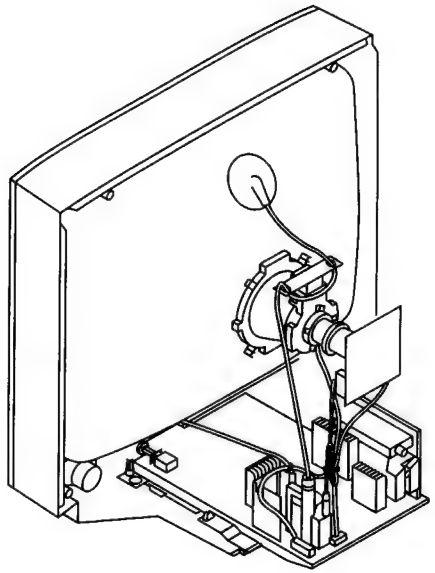

2-5. A BOARD REMOVAL

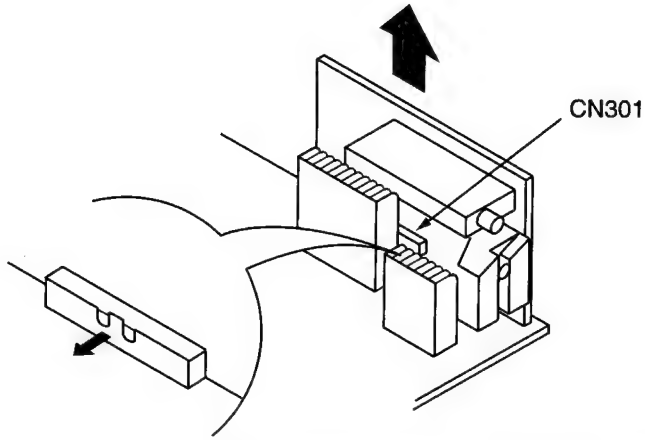

(1) Remove CN301 before removing A board.

2-6. EXTENSION BOARD

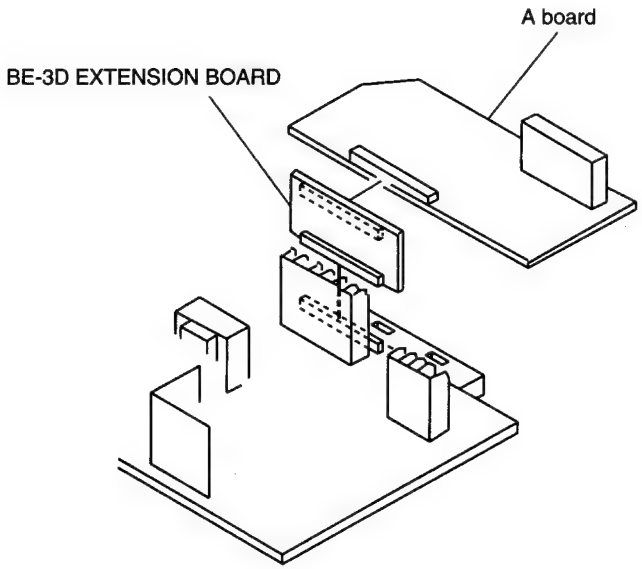

2-7. PICTURE TUBE REMOVAL

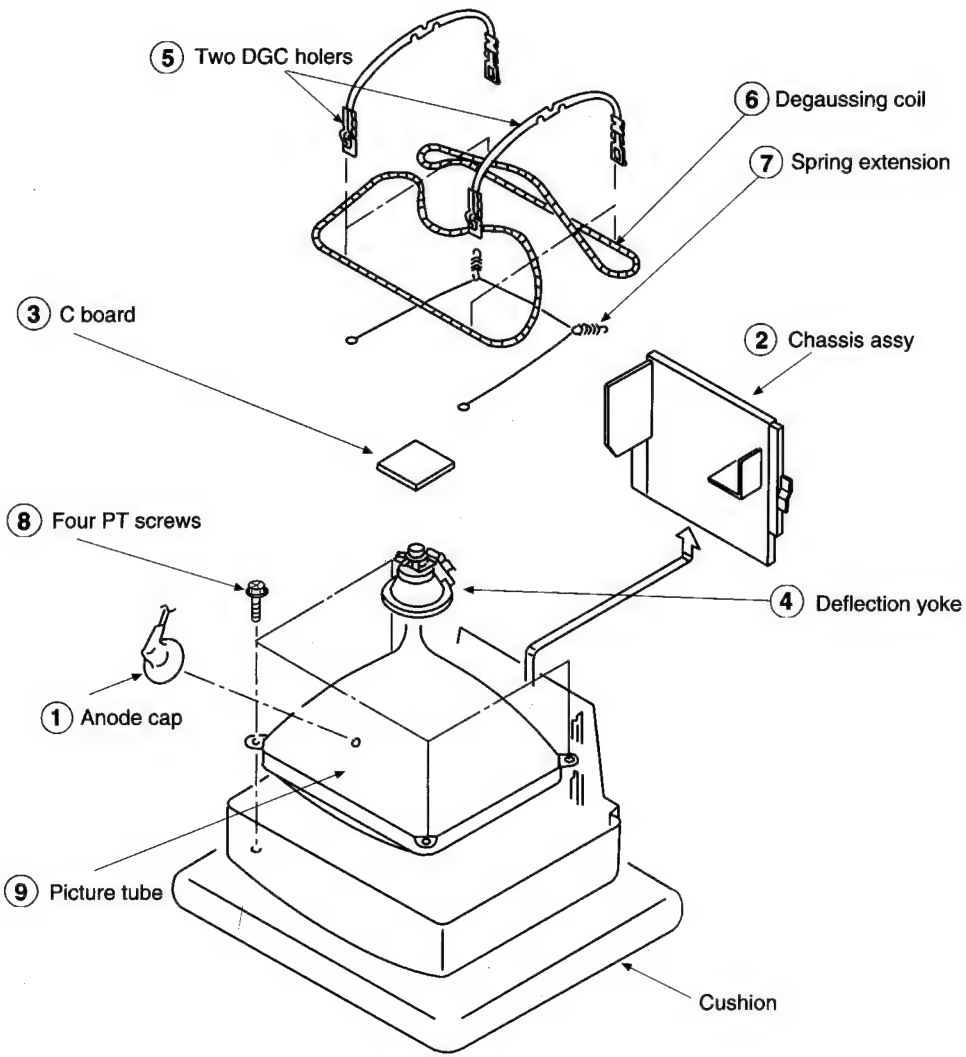

• REMOVAL OF ANODE-CAP

Note: Short circuit the anode of the picture tube and the anode cap to the metal chassis, CRT shield or carbon paint on the CRT, after removing the anode.

* **REMOVING PROCEDURES.**

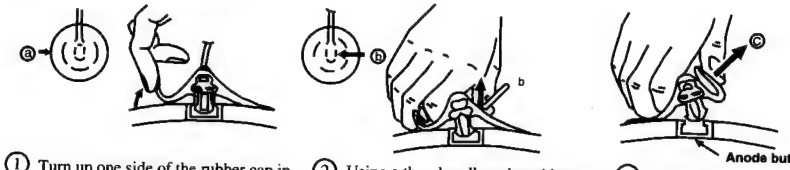

① Turn up one side of the rubber cap in the direction indicated by the arrow ⓐ

② Using a thumb pull up the rubber cap firmly in the direction indicated by the arrow ⓑ

③ When one side of the rubber cap is separated from the anode button, the anode-cap can be removed by turning up the rubber cap and pulling it up in the direction of the arrow ⓒ

• HOW TO HANDLE AN ANODE-CAP

① Don't damage the surface of anode-cap with sharp shaped material !

② Don't press the rubber hardly not to hurt inside of anode-caps !
A metal fitting called as shatter-hook terminal is built into the rubber.

③ Don't turn the foot of rubber over hardly !
The shatter-hook terminal will stick out or damage the rubber.

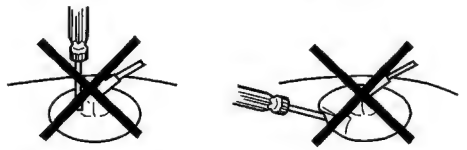

SECTION 3
SET - UP ADJUSTMENTS

- When complete readjustment is necessary or a new picture tube is installed, carry out the following adjustments.
- Unless there are specific instructions to the contrary, carry out these adjustments with the rated power supply.
- Unless there are specific instructions to the contrary, set the controls and switches to these settings :

◑ Contrast ..... 80% (or remote control normal)
☼ Brightness 50%

- Carry out the following adjustments in this order :

1. Beam landing
2. Convergence
3. Focus
4. White balance

Note: Testing equipment required.
1. Color bar/pattern generator
2. Degausser
3. DC power supply
4. Digital multimeter
5. Oscilloscope

Preparation:
- In order to reduce the influence of geomagnetism on the set's picture tube, face it east or west.
- Switch on the set's power and degauss with the degausser.

3-1. BEAM LANDING

1. Input the white signal with the pattern generator.
   CONTRAST } normal
   BRIGHTNESS }
2. Set the pattern generator raster signal to red.
3. Move the deflection yoke forward and adjust with the purity control so that the red is at the centre and the blue and the green take up equally sized areas on each side. (See Fig. 3-1 - 3-3)
4. Move the deflection yoke forward and adjust so that the entire screen becomes red. (See Fig. 3-1)
5. Switch the raster signal to blue, then to green and verify the condition.
6. When the position of the deflection yoke has been decided, fasten the deflection yoke with the screws.
7. If the beam does not land correctly in all the corners, use a magnet to adjust it. (See Fig. 3-4)

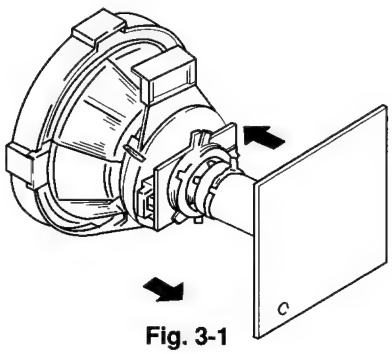

Fig. 3-1

Fig. 3-2

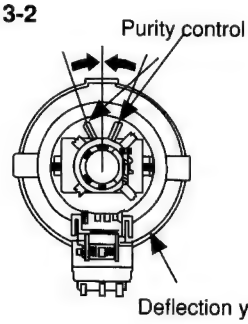

Fig. 3-3

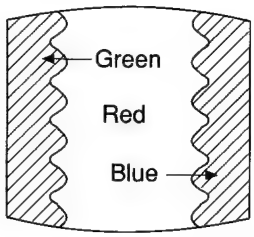

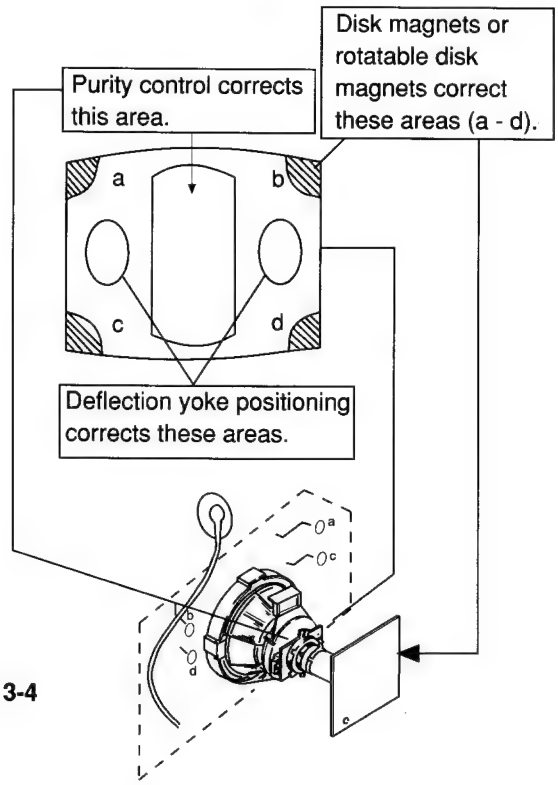

Fig. 3-4

3-2. CONVERGENCE

Preparation:

- Before starting this adjustment, adjust the focus, horizontal size, and vertical size.
- Minimize the brightness setting.
- Provide a dot pattern.

(1) Horizontal and vertical static convergence

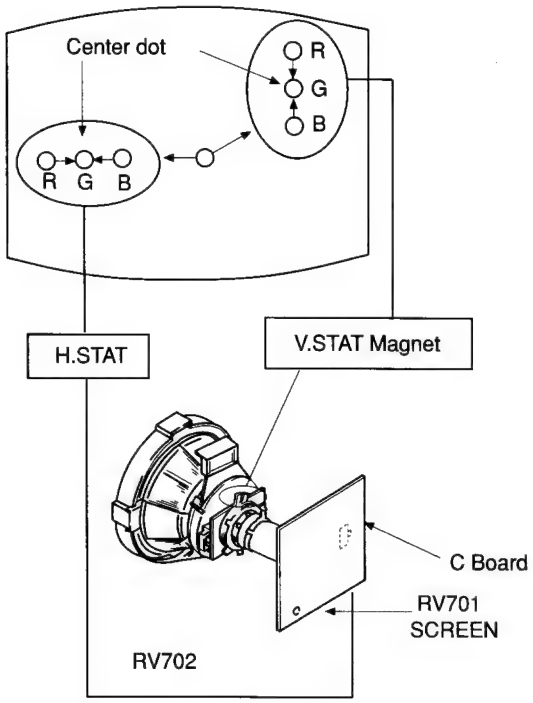

1. (Moving horizontally), adjust the H.STAT control so that the red, green, and blue points are on top of each other at the centre of the screen.
2. (Moving vertically), adjust the V.STAT magnet so that the red, green, and blue points are on top of each other at the centre of the screen.
3. If the H.STAT variable resistor cannot bring the red, green, and blue points together at the centre of the screen, adjust the horizontal convergence with the H.STAT variable resistor and the V.STAT magnet in the manner given below.
   (In this case, the H.STAT variable resistor and the V.STAT magnet influence each other)

- Tilt the V.STAT magnet and adjust the static convergence by opening or closing the V.STAT magnet.

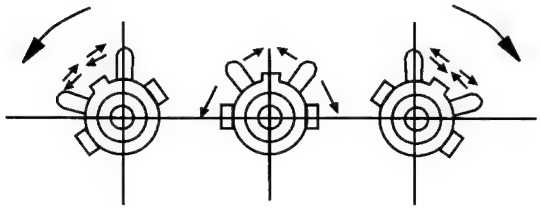

4. If the V.STAT magnet is moved in the direction of the (a) and (b) arrows, the red, green, and blue points move as shown below.

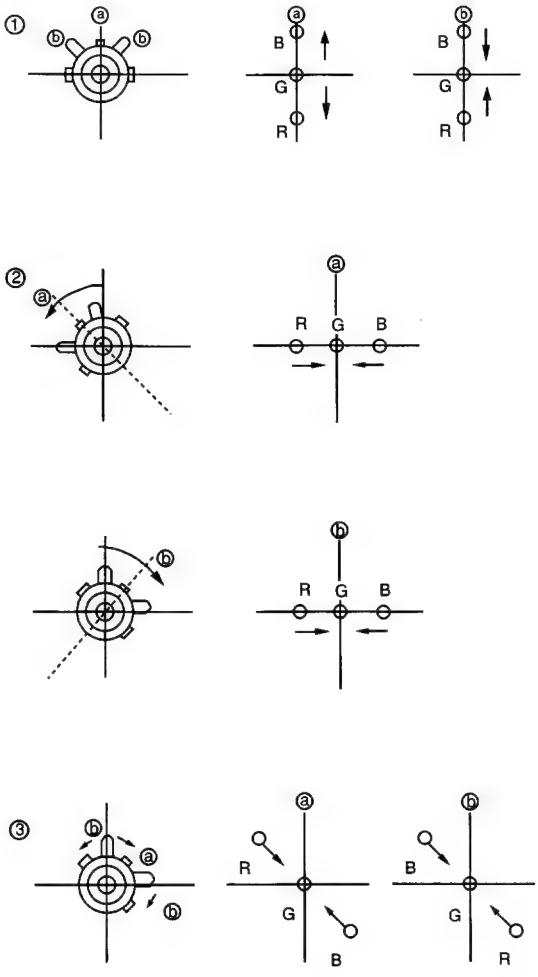

- Operation of BMC (Hexapole) Magnet

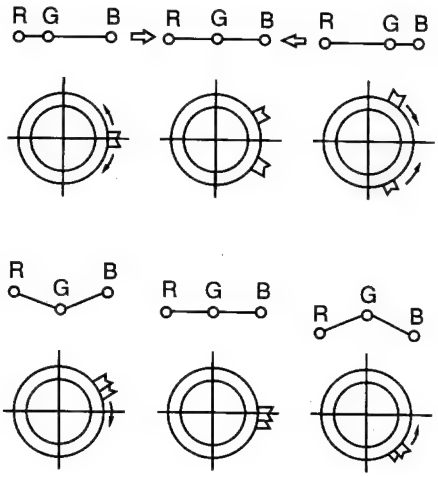

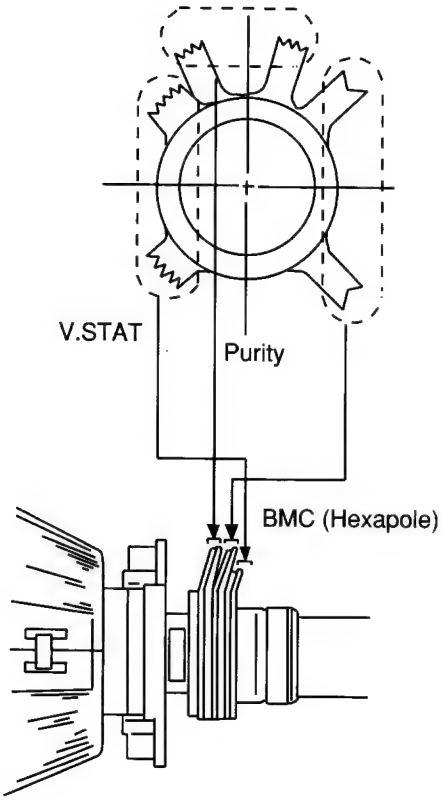

- The respective dot position resulting from moving each magnet interact, so be sure to perform adjustment while tracking.
  Use the H.STAT VR to adjust the red, green, and blue dots so they coincide at the centre of the screen (by moving the dots in the horizontal direction).

(2) Dynamic convergence adjustment.

Preparation:

- Before starting this adjustment, adjust the horizontal static convergence and the vertical static convergence.

1. Slightly loosen the deflection yoke screws.
2. Remove the deflection yoke spacer.
3. Move the deflection yoke as shown in the figure below and optimize the convergence.
4. Tighten the deflection yoke screws.
5. Re-install the deflection yoke spacer.

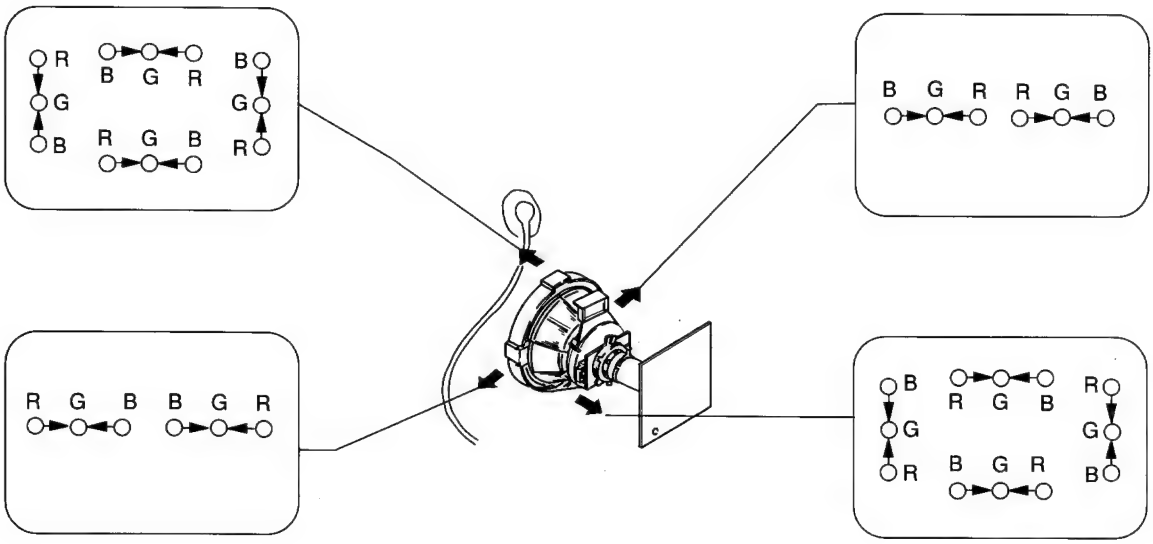

(3) Screen corner convergence.

If you are unable to adjust the corner convergence properly, correct them with the use of permalloy assemblies.

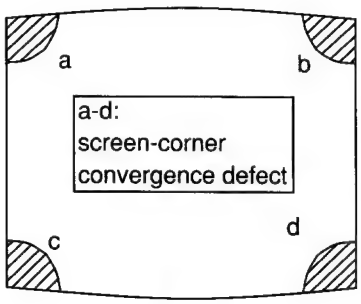

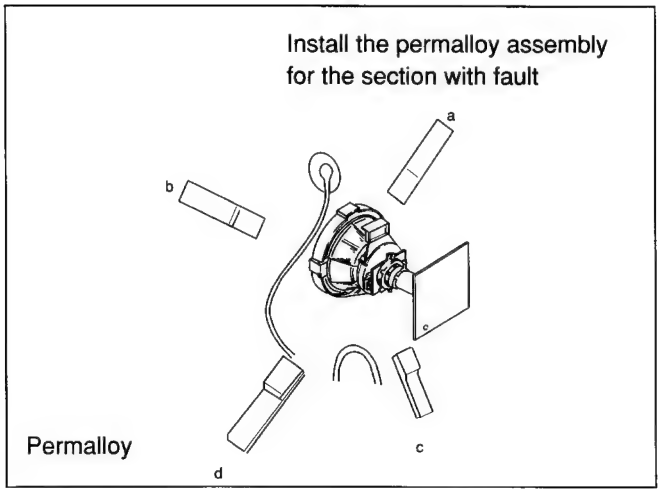

3-3. WHITE BALANCE

G2 Setting

1. Switch the set into AV mode (apply no signal to the AV connectors).
2. Connect a Volt Meter to Test Point 1 on the A board.
3. Adjust RV01 to obtain a voltage of 3.0V ±0.3V.

White balance adjustment

1. Input an all white signal from the pattern generator.
2. Enter into the service mode.
3. Enter into Picture Adjustment service menu.
4. Select sub-contrast and adjust to 7.
5. Select the Green Drive and adjust so that the white balance becomes optimum.
6. Select the Blue Drive and adjust so that the white balance becomes optimum.
7. Press the TV button to return to TV operation.

PICTURE ADJUSTMENT

AFC mode	1
REF position	3
SCP BGR	1
SCP BGF	1
Trap Fo	7
Sub contrast	Adj
Sub colour	Adj
Sub brightness	Adj
Sub hue	Adj
Green drive	Adj
Blue drive	Adj
Green cutoff	Adj
Blue cutoff	Adj
Gamma	0
Pre / overshoot	0
Y delay	5

SECTION 4
CIRCUIT ADJUSTMENTS

4-1. ELECTRICAL ADJUSTMENTS

Service adjustment to this model can be performed with the supplied remote commander RM-862.

HOW TO ENTER INTO SERVICE MODE

1. Turn on the main power switch of the set and enter into standby mode.
2. Press the following sequence of buttons on the Remote Commander.

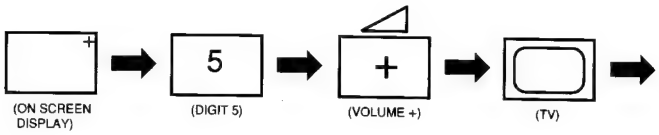

"TT-- " will appear in the top right corner of the screen. Other status information will also be displayed.

3. Press MENU on the commander to obtain the following menu on the screen.

TEST MENU

> Picture adjustment
Geometry
Wide
MSP
IC status
Current TV status

4. Move to the corresponding adjustment using the ◇ button on the commander.
5. Move the button to the right ◇ to enter the selected adjustment.
6. Turn off the power to quit the service mode when adjustments are completed.

PICTURE ADJUSTMENT

AFC mode	1
REF position	2
SCP BGR	1
SCP BGF	1
Trap Fo	0
Sub contrast	Adj
Sub colour	Adj
Sub brightness	Adj
Sub hue	Adj
Green drive	Adj
Blue drive	Adj
Green cutoff	Adj
Blue cutoff	Adj
Gamma	0
Pre / overshoot	0
Y delay	3

GEOMETRY ADJUSTMENT

V Size	Adj
V Position	Adj
S Correction	Adj
V Linearity	Adj
H Size	Adj
H Position	Adj
Pin Amp	Adj
Pin Phase	Adj
AFC Bow	Adj
AFC Angle	Adj
EHT V	Adj
EHT H	Adj
Corner Pin	Adj

WIDE

V Aspect	47
V Scroll	31
Upper V Lin	0
Lower V Lin	0
Left Blanking	1
Right Blanking	11

MSP	
AGC ON/OFF	ON
Constant gain CDB	0
FM prescale FMP	36
Zwei mono-st WHI	36
Zwei st-mono WLO	18
Zwei mono-bi WMH	36
Zwei bi-mono WLO	18
Time zwei WML	41
Fawct limit	10
Fawct soll init FAW	12
Fawer tol	2
Nicam Err Max CCT	10
Nicam Err Min	0
Nicam Prescale NIP	97
Time Nicam	31
Carrier mute CRM	OFF
Audio clock ACO	HIZ
Scart prescale	25
Scart volume	64

IC STATUS (CXA2000 / CXA2040)	
CXA2000	
H lock	1
IKR	1
VNG	0
X-RAY	0
Colour system	3
CV1 Sync	1
CXA2040	
Sync sep	1
S1 mode pin	01
S2 mode pin	01
TUNER	
Tuner status	01101011

TV STATUS	
Text system	C TEXT/TV TEXT
Dolby	NO/YES
Text language set	WEST/EAST/RUSSIAN
Menu language set	WEST/EAST/RUSSIAN
Destination	B/D/U/K/L/E/A/R
Scart 16:9	OFF/ON
RGB priority	OFF/ON
Ageing	OFF/ON
Size	29/25
Colour trap sw	SECAM/ALL
Velocity mod	ON/OFF
AFT STATUS	WINDOW/HIGH/LOW

SUB BRIGHTNESS ADJUSTMENT

1. Input a Phillips pattern.
2. Set the picture control to minimum.
3. Enter into the Picture Adjustment Service Menu.
4. Adjust the Sub-Brightness data so that there is barely a difference between the 0 IRE and 10 IRE signal.

SUB CONTRAST ADJUSTMENT

1. Input a video that contains a small 100% area on a black background.
2. Set the picture control to maximum.
3. Connect an oscilloscope to pin 3 of CN301 (A board).
4. Enter into the Picture Adjustment Service Menu.
5. Adjust the Sub-contrast data to obtain a black to white amplitude of 2.50 volts.

SUB COLOUR ADJUSTMENT

1. Receive a PAL Colour Bar video signal.
2. Connect an oscilloscope to pin 3 of CN301 (A board).
3. Enter into the Picture Adjustment Service Menu.
4. Adjust the sub colour data so that cyan, magenta and blue colour bars are of equal height.

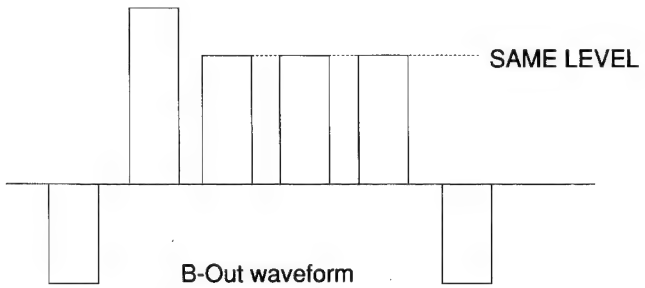

NOTE: The data shown in the TV STATUS table is dependant on destination, screen size and country.

SYSTEM B/G, D/K, I & L I.F ADJUSTMENT

1. Input an off air signal of between 60-100dBuV / 75 ohm terminated, via the tuner socket.
2. Enter into the I.F adjustment service mode (i.e. " TT 59 ") to fix the I.F frequency to 38.9 MHz.
3. Enter into the service mode and select "Current TVStatus".
4. Adjust the I.F coil (LV01) until the "AFT Status" indicates a " Window " condition.

SYSTEM L BAND 1 I.F ADJUSTMENT

1. Input an off air signal of between 60-100dBuV / 75 ohm terminated, via the tuner socket.
2. Enter into the I.F adjustment service mode (i.e. " TT 59 ") to fix the I.F frequency to 34.2 MHz.
3. Enter into the service mode and select "Current TVStatus".
4. Adjust the RV02 until the "AFT Status" indicates a " Window " condition.

TUNER AGC ADJUSTMENT

1. Receive a signal of 63dBuV / 75 ohm terminated via the tuner socket.
2. Measure the voltage at test point 1 (A board).
3. Adjust RV01 to obtain a voltage of 3.0V ± 0.3V.

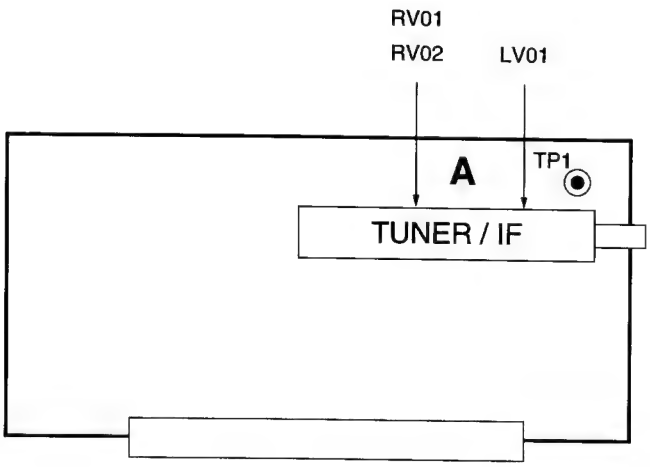

- A Board component side -

DEFLECTION SYSTEM ADJUSTMENT

1. Enter into the Geometry Adjustment Service Menu.
2. Select and adjust each item in order to obtain the optimum image.

GEOMETRY ADJUSTMENT

V Size	Adj
V Position	Adj
S Correction	Adj
V Linearity	Adj
H Size	Adj
H Position	Adj
Pin Amp	Adj
Pin Phase	Adj
AFC Bow	Adj
AFC Angle	Adj
EHT V	Adj
EHT H	Adj
Corner Pin	Adj

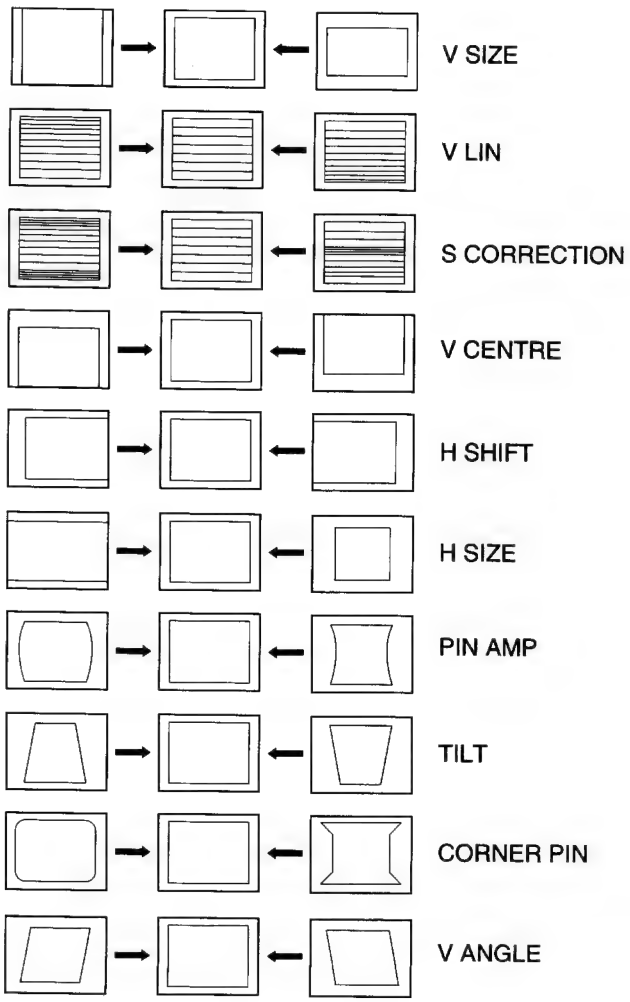

4-2. TEST MODE 2:

Is available by pressing Test button twice, OSD " TT " appears. The functions described below are available by pressing the two numbers. To release the Test mode 2, press 0 twice, or switch the TV into stand-by mode.

00	Switch test mode 2 off	
01	Picture maximum	
02	Picture minimum	
03	Volume 30%	
04	Set service menu mode	
05	Set production menu mode	
06	Volume 80%	
07	Set ageing condition	
08	Set shipping condition	
09	Language reset	
10	No function	
11	Adjustment without OSD	
12	Dummy	
13	Display TV configuration	
14	Forced AV 6:9 mode	
15	Reset LPM from ROM data	
16	copy LPM to reset memory	
17	Preset label for AV sources	
18	RGB priority on/off	
19	Clear all preset labels	
20	No function	
21	Sub contrast	
22	Sub colour	
23	Sub brightness	
24	Set destination = U	
25	Set destination = D	
26	Set destination = B	
27	Set destination = K	
28	Set destination = L	
29	Set destination = E	
30	No function	
31	Set destination =A	
32	Dummy	
33	Auto AGC	
34	Dummy	
35	Manual AGC adjust	

36-40	Dummy	
41	Re-initialise NVM	
42	Production use only	
43	Initialise geometry settings	
44	Initialise all favourite pages = 100	
45	Channel locks = off	
46	Dealer commander mode	
47	Default MSP settings	
48	Restore NVM test byte	
49	Delete NVM test byte	
50-60	No function	
61	Turn on Dolby Pro Logic mode	
62	White noise to left speaker	
63	White noise to right speaker	
64	White noise to centre speaker	
65	White noise to rear speaker	
66	Set standard stereo mode	
67	Set Pro Logic normal mode	
68	Set Pro Logic wide mode	
69	Set Pro Logic phantom mode	
70	No function	
71	Picture rotation on/off	
72	Dolby register settings	
74	No function	
75	Reset picture colour balance	
76	Reset picture geometry	
77	Reset sound settings	
78	Reset error codes in the NVM	
79-99	No function	

4-3. BE-3D SELF DIAGNOSTIC SOFTWARE

The identification of errors within the BE-3D chassis is triggered in 1 of 2 ways :- 1: Bus busy or 2: Device failure to respond to IIC. In the event of one of these situations arising the software will first try to release the bus if busy (Failure to do so will report with continuous flashing LED) and then communicate with each device in turn to establish if a device is faulty. If a device is found to be faulty the relevant device number will be displayed through the led (Series of flashes which must be counted) See Table 1, non fatal errors are reported with this method.

Table 1

ERROR	LED ERROR COUNT
Protection circuit trip < ANY TIME >	02
IIC SCL LOW < POWER UP ONLY >	03
IIC SDA LOW < POWER UP ONLY >	04
IIC SDA & SCL LOW < POWER UP ONLY >	05
Jungle/Choroma controller no acknowledge < POWER UP ONLY >	06
Video Switch no acknowledge < POWER UP ONLY >	07
Tuner no acknowledge	08
MSP no acknowledge	09
NVM no acknowledge	10
M3L TXD LOW < POWER UP ONLY >	11
M3L RXD LOW < POWER UP ONLY >	12
M3L ENABLE LOW < POWER UP ONLY >	13
M3L TXD & RXD LOW < POWER UP ONLY >	14
Compact Text test fail < POWER UP ONLY >	15
AV switch cannot power on reset	16
Cannot initialise jungle	17
NVM acknowledge fail after initialisation	18
Multiple devices with no acknowledge < POWER UP ONLY >	19
Compacttext run-time failure	20
AVSWITCH response failure after power up	21
JUNGLE/CHROMA controller response failure after power up	22
CompactText does not respond	23

Flash Timing Example : e.g. error number 3.

Stby LED

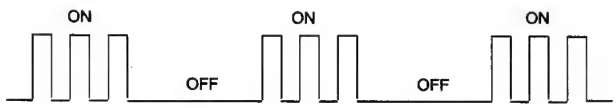

SERVICE MANUAL

BE-3D CHASSIS

MODEL	COMMANDER	DEST.	CHASSIS NO.
KV-25F2A	RM-862	Italian	SCC-K05E-A
KV-25F2B	RM-862	French	SCC-K01E-A
KV-25F2D	RM-862	AEP	SCC-K07E-A
KV-25F2E	RM-862	Spanish	SCC-K06E-A
KV-25F2U	RM-862	UK	SCC-K04C-A

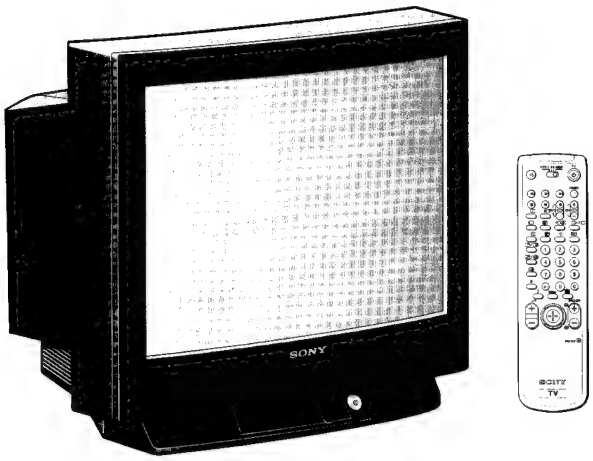

MICROFILM

TRINITRON® COLOR TV

SONY®

ITEM MODEL	Television System	Channel Coverage	Colour System
Italian	B/G/H	VHF: E2-E12, S1-S20, A-H, H1,H2 UHF: E21-E69	PAL NTSC3.58/4.43 (video input only)
French	B/G/H, D/K, L, I	L SECAM VHF: F2-F10 UHF: F21-F69 TV CABLE TV (1) VHF: B-Q UHF: S21-S44 PAL B/G/H VHF: E2-E12 UHF: E21-E69 CABLE TV (1) : S1-S41 CABLE TV (2) : S01-S05, M1-M10, U1-U10 ITALIA VHF: A-H, H1, H2 PAL I UHF: B21-B69 D/K VHF: R01-R20 UHF: B21-B69 CABLE TV (1) : S1-S41 CABLE TV (2) : S01-S05, S42-S46	PAL, SECAM NTSC3.58/4.43 (video input only)
AEP	B/G/H, D/K	B/G/H VHF: E2-E12 UHF: S1-S20 CABLE TV (1) : S1-S41 CABLE TV (2) : S01-S05, M1-M10, U1-U10 ITALIA VHF: A-H, H1, H2 D/K VHF: R01-R20 UHF: B21-B69 CABLE TV (1) : S1-S41 CABLE TV (2) : S01-S05, S42-S46	PAL, SECAM NTSC3.58/4.43 (video input only)
Spanish	B/G/H, D/K	PAL B/G/H VHF: E2-E12 UHF: E21-E69 CABLE TV (1) : S1-S41 CABLE TV (2) : S01-S05, M1-M10, U1-U10 ITALIA VHF: A-H, H1, H2 D/K VHF: R01-R20 UHF: B21-B69 CABLE TV (1) : S1-S41 CABLE TV (2) : S01-S05, S42-S46	PAL, SECAM NTSC3.58/4.43 (video input only)
UK	I	UHF: U21-U69	PAL NTSC3.58/4.43 (video input only)

MODEL	25F2A	25F2B	25F2D	25F2E	25F2U
Power Consumption	79W	103W	103W	103W	164W

SPECIFICATIONS

Picture Tube — Super Trinitron
Approx. 63 cm (25 inches)
(Approx. 59 cm picture measured diagonally)
110° -deflection

Rear/Front Terminals

[REAR]

1 21-pin Euro connector (CENELEC standard)
- Inputs for audio / video signals
- Inputs for RGB
- Outputs for TV audio and video signals

2/S 2, 21-pin Euro connector (CENELEC standard)
- Inputs for audio / video signals
- Inputs for S video
- Outputs for TV audio and video signals (selectable)

Audio outputs - phono jacks
Left/Right Speaker Terminals
Surround Speaker Terminals

[FRONT]

3 , Video input - phono jack
3 , Audio inputs - phono jacks
3 , S video input - 4 pin DIN
Stereo minijack - headphone jack

Sound output

Left/Right	2x10W (RMS) 2x20W (music power)
Centre	2x2.5W (RMS) 2x5W (music power)
Surround	2x5W (RMS) 2x10W (music power)
Dimensions	586x551x480 mm approx.
Weight	Approx. 34.0 kg (with speakers)

Supplied accessories
- RM-862 Remote Commander (1)
- Batteries R6 (2)
- Left Speaker (1)
- Right Speaker (1)
- Surround Speakers (2)
- Surround Speakers Leads (2)

Other features — Fastext, NICAM
Dolby Pro Logic

[RM-862]

Remote control system	Infrared control
Power requirements	3V dc (2 batteries) R6 (size AA)
Dimensions	Approx. 210x56x24 mm (w/h/d)
Weight	Approx. 110g (Not including battery)

Design and specifications are subject to change without notice.

Item \ Model name	KV-25F2A	KV-25F2B	KV-25F2D	KV-25F2E	KV-25F2U
PIP	OFF	OFF	OFF	OFF	OFF
MPIP	OFF	OFF	OFF	OFF	OFF
RGB Priority	ON	ON	OFF	OFF	OFF
Rotation Coil	OFF	OFF	OFF	OFF	OFF
VM Set	OFF	OFF	OFF	OFF	OFF
Scart 1	ON	ON	ON	ON	ON
Scart 2	ON	ON	ON	ON	ON
Front in (3)	ON	ON	ON	ON	ON
Scart 4	OFF	OFF	OFF	OFF	OFF
AKB in 16:9 mode	ON	ON	ON	ON	ON
TXT	ON	ON	ON	ON	ON
FLOF	ON	ON	ON	ON	ON
TOP	ON	ON	ON	ON	ON
Norm B/G/H	ON	ON	ON	ON	OFF
Norm I	OFF	ON	OFF	OFF	ON
Norm D/K	OFF	ON	ON	ON	OFF
Norm L	OFF	ON	OFF	OFF	OFF
Language Preset	Italian	French	German	Spanish	English

WARNING (KV-25F2U only)

The flexible mains lead is supplied connected to a **B.S. 1363** fused plug having a fuse of **5 AMP** capacity. Should the fuse need to be replaced, use a **5 AMP FUSE** approved by **ASTA** to **BS 1362**, ie one that carries the ASTA mark.
IF THE PLUG SUPPLIED WITH THIS APPLIANCE IS NOT SUITABLE FOR YOUR SOCKET OUTLETS IN YOUR HOME.
IT SHOULD BE CUT OFF AND AN APPROPRIATE PLUG FITTED.
THE PLUG SEVERED FROM THE MAINS LEAD MUST BE DESTROYED AS A PLUG WITH BARED WIRES IS DANGEROUS IF ENGAGED IN A LIVE SOCKET OUTLET.
When an alternative type of plug is used it should be fitted with a **5 AMP FUSE**, otherwise the circuit should be protected by a **5 AMP FUSE** at the distribution board.

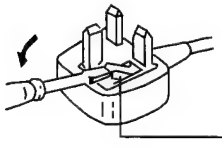

How to replace the fuse.
Open the fuse compartment with the screwdriver blade and replace the fuse.

21 pin connector (1, 2 / S 2)

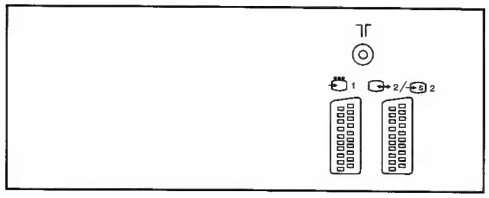

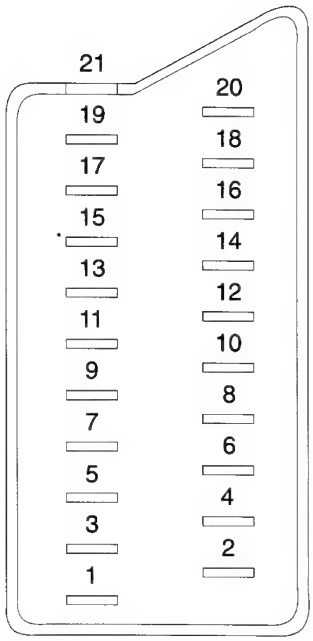

Pin No.	1	2	4	Signal	Signal Level
1	○	○	○	Audio output B (Right)	Standard level : 0.5V rms Output impedance : Less than 1k ohms*
2	○	○	○	Audio input B (Right)	Standard level : 0.5V rms Output impedance : More than 10k ohms*
3	○	○	○	Audio output A (Left)	Standard level : 0.5V rms Output impedance : Less than 1k ohm*
4	○	○	○	Ground (Audio)	
5	○	○	○	Ground (Blue)	
6	○	○	○	Audio input A (Left)	Standard level : 0.5V rms Output impedance : Less than 10k ohm*
7	○	●	●	Blue input	0.7 ± 3dB, 75 ohms, positive
8	○	○	○	Function select (AV control)	High state (9.5 - 12V) : Part mode Low state (0 - 2V) : TV mode Input impedance : More10k ohms Input capacitance : Less than 2nF
9	○	○	○	Ground (Green)	
10	○	○	○	Open	
11	○	●	●	Green	
12	○	○	○	Open	
13	○	○	○	Ground (Red)	
14	○	○	○	Ground (Blanking)	
15	○	—	—	Red input	0.7 ± 3dB, 75 ohms, positive
	—	○	○	(S signal) croma input	0.7 ± 3dB, 75 ohms, positive
16	○	●	●	Blanking input (Ys signal)	High state (1 - 3V) Low state (0 - 0.4V) Input impedance : 75 ohms
17	○	○	○	Ground (Video output)	
18	○	○	○	Ground (Video input)	
19	○	○	○	Video output	1V ± 3dB, 75ohms, positive sync : 0.3V (-3 + 10dB)
20	○	—	—	Video input	1V ± 3dB, 75ohms, positive sync : 0.3V (-3 + 10dB)
	—	○	○	Video input Y (S signal)	1V ± 3dB, 75ohms, positive sync : 0.3V (-3 + 10dB)
21	○	○	○	Common ground (plug, sheild)	

○ Connected ● Not Connected (Open) * at 20Hz - 20kHz

Pin No.	Signal	Signal Level
1	Ground	
2	Ground	
3	Y (S signal) input	1V ± 3dB 75 ohm, positive Sync. 0.3V -3 + 10dB
4	C (S signal) input	0.3V ± 3dB 75ohm, positive Sync.

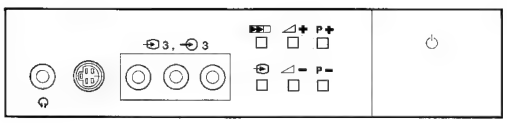

TABLE OF CONTENTS

Section	Title	Page
1. GENERAL		
	Overview	7
	Getting Started	8
	TV Operation	9
	Advanced Operations	10
	Teletext	16
	Optional Equipment	17
	For Your Information	19
2. DISASSEMBLY		
2-1.	Rear Cover Removal	20
2-2.	Chassis Assy Removal	20
2-3-1.	Service Position (1)	20
2-3-2.	Service Position (2)	20
2-4.	Wire Dressing	21
2-5.	A Board Removal	21
2-6.	A Extension Board	21
2-7.	A1 Extension Boards	21
2-8.	Picture Tube Removal	22
	Removal and Replacement of The Main-Bracket Bottom Plates	23
3. SET-UP ADJUSTMENTS		
3-1.	Beam Landing	24
3-2.	Convergence	25
3-3.	White Balance	27
4. CIRCUIT ADJUSTMENTS		
4-1.	Electrical Adjustments	28
4-2.	Test Mode 2 :	31
4-3.	BE-3D Self Diagnostic Software	32
5. DIAGRAMS		
5-1.	Block Diagrams	33
5-2.	Circuit Boards Location	39
5-3.	Schematic Diagrams and Printed Wiring Boards	39
	* D Board	43
	* A Board	48
	* C Board	58
	* A1 Board	61
	* J Board	63
	* K1 Board	63
	* IF Board [VIF (AEP), VIF (UK)]	65
	* IF Board [VIF (FR)]	65
	IC Blocks	67
5-4.	Semiconductors	69
6. EXPLODED VIEWS		
6-1.	Chassis	71
6-2.	Picture Tube	72
6-3.	Box Speaker	73
7. ELECTRICAL PARTS LIST		74

CAUTION

SHORT CIRCUIT THE ANODE OF THE PICTURE TUBE AND THE ANODE CAP TO THE METAL CHASSIS, CRT SHIELD, OR CARBON PAINTED ON THE CRT, AFTER REMOVING THE ANODE.

ATTENTION

APRES AVOIR DECONNECTE LE CAP DE L'ANODE, COURT-CIRCUITER L'ANODE DU TUBE CATHODIQUE ET CELUI DE L'ANODE DU CAP AU CHASSIS METALLIQUE DE L'APPAREIL, OU AU COUCHE DE CARBONE PEINTE SUR LE TUBE CATHODIQUE OU AU BLINDAGE DU TUBE CATHODIQUE.

WARNING !!

AN ISOLATION TRANSFORMER SHOULD BE USED DURING ANY SERVICE TO AVOID POSSIBLE SHOCK HAZARD, BECAUSE OF LIVE CHASSIS.
THE CHASSIS OF THIS RECEIVER IS DIRECTLY CONNECTED TO THE AC POWER LINE.

ATTENTION !!

AFIN D'EVITER TOUT RISQUE D'ELECTROCUTION PROVENANT D'UN CHÁSSIS SOUS TENSION, UN TRANSFORMATEUR D'ISOLEMENT DOIT ETRE UTILISÉ LORS DE TOUT DÉPANNAGE.
LE CHÁSSIS DE CE RÉCEPTEUR EST DIRECTEMENT RACCORDÉ À L'ALIMENTATION SECTEUR.

SAFETY-RELATED COMPONENT WARNING!!

COMPONENTS IDENTIFIED BY SHADING AND MARK ⚠ ON THE SCHEMATIC DIAGRAMS, EXPLODED VIEWS AND, IN THE PARTS LIST ARE CRITICAL FOR SAFE OPERATION. REPLACE THESE COMPONENTS WITH SONY PARTS WHOSE PART NUMBERS APPEAR AS SHOWN IN THIS MANUAL OR IN SUPPLEMENTS PUBLISHED BY SONY.

ATTENTION AUX COMPOSANTS RELATIFS À LA SÉCURITÉ!!

LES COMPOSANTS IDENTIFIÈS PAR UNE TRAME ET PAR UNE MARQUE ⚠ SUR LES VUES EXPLOSÉES ET LES LISTES DE PIECES SONT D'UNE IMPORTANCE CRITIQUE PUR LA SÉCURITÉ DU FONCTIONNEMENT. NE LES REMPLACER QUE PAR DES COMPOSANTS SONY DONT LE NUMÉRO DE PIÉCE EST INDIQUÉ DANS LE PRÉSENT MANUEL OU DANS DES SUPPLÉMENTS PUBLIÉS PAR SONY.

SECTION 1 GENERAL

The operating instructions mentioned here are partial abstracts from the Operating Instruction Manual. The page numbers of the Operating Instruction Manual remain as in the manual.

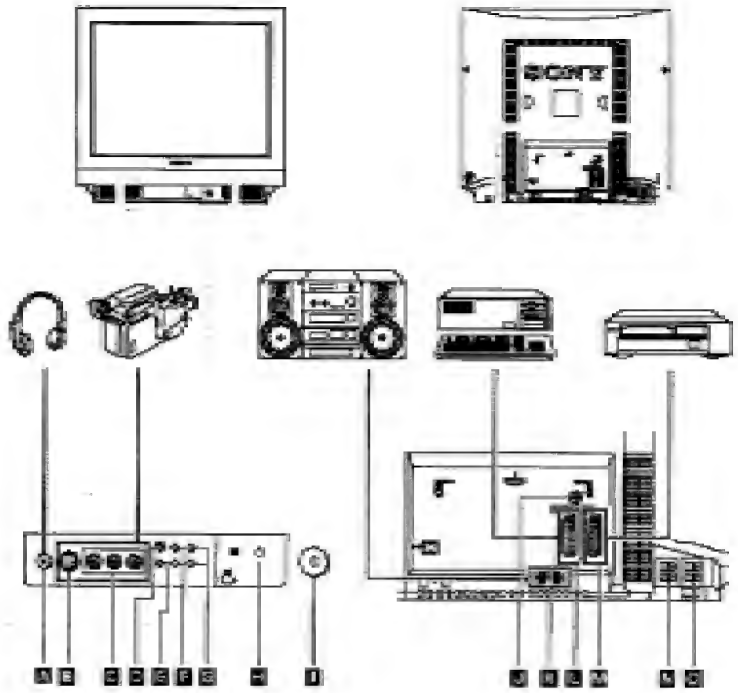

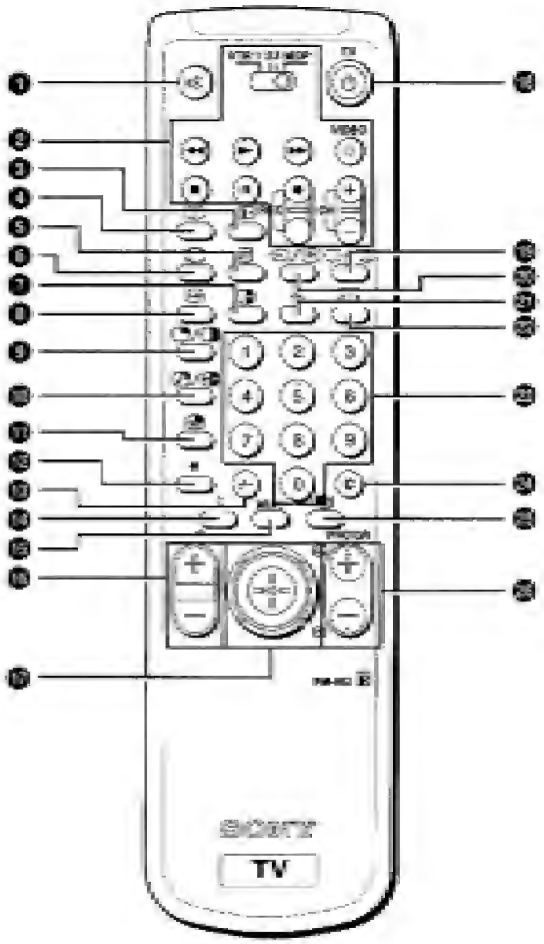

Overview

This section briefly describes the controls and the buttons on the TV set and on the Remote Commander. Please open the flap at the front of the Instruction manual for illustrations of the TV set and the Remote Commander. Letters in boxes refer to the buttons on the TV set, numbers in circles to the buttons on the Remote Commander. For more information, refer to the page numbers given next to each description.

TV buttons and Terminals

Reference and Symbol	Name	Refer to Page
Front of the set		
A	Headphones jack	4
B	3	33
C	3, 3	33
D	Automatic Preset button	13
E	Input mode button	14
F	+/-	13
G	P +/-	13
H	Standby mode indicator	13
I	Main power switch	13
Rear of the set		
J	Aerial socket	11
K	Audio-phono jacks	33
L	1	33
M	2; 2	33
N	L/G / S/I, R/D / D/D	10
O	S	10

Remote Commander Operation

Reference and Symbol	Name	Refer to Page
	Muting on/off button	13
	VCR operation	36
VTR123MDP	Video equipment selector	
	Video equipment operation buttons	
VIDEO, CH +/-		
	On-screen display button	13
	Time display button	13
	Teletext button	14
	TV power on/TV mode button	13, 14
	No function on this set	-
- / - -	Double-digit entering button	13
♪	Sound mode button	20
MENU	Menu on/off button	15
+/-	Volume control button	15
	Joystick for menu selection. Press to confirm selection (OK function)	15
TV	TV standby button	13
	Teletext: reveal button	31
/	Input mode button	14, 33
	Teletext: Freezing the subpage	
	Teletext: Favourite pages button	32
	Button to change screen format	13
1, 2, ..., 9, 8	Number buttons	13
C	Direct channel button	14
	Picture mode button	20
PROGR +/-	Programme buttons. Teletext: Page up/page down buttons	13, 14

Step 1

Connecting the Speakers

Do not switch on the TV before you connect the speakers.

Dolby (*) Pro Logic Surround normally requires 5 speakers:

Centre speaker (incorporated in the TV set)
- for anchoring the stable sound image, like dialogue, to the TV screen

Left and Right front speakers
- for the normal two channel stereo or bilingual broadcasts

Surround speakers
- for the special effects created by the surround channel

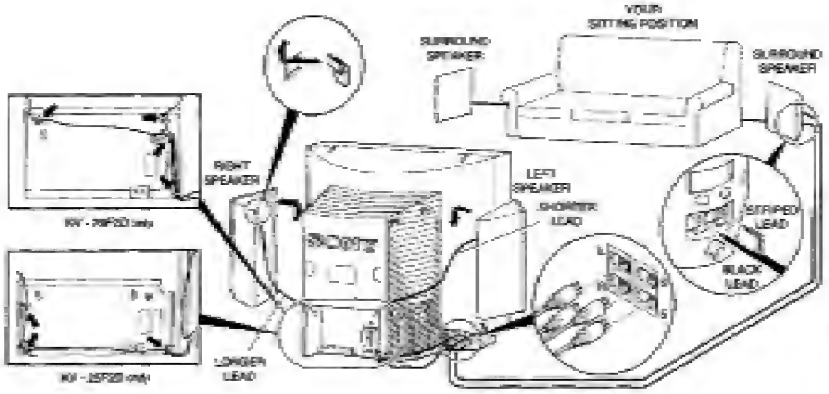

Notes:

- Connect the speakers using the leads provided. The striped lead (+) is for the red terminal of the speaker and the black lead (-) is for the black terminal.
- If you use your own speakers, make sure they are at least 8Ω impedance and are magnetically shielded. Otherwise picture distortion may occur.
- For your safety, do not hold the speakers when lifting the set.

(*) Manufactured under license from Dolby Laboratories Licensing Corporation. DOLBY, the double-D symbol ⅆⅆ and "PRO LOGIC" are trademarks of Dolby Laboratories Licensing Corporation.

Step 2

Connecting the Aerial

(If you connect a VCR, skip to step 3)

Insert the aerial plug tightly into the aerial socket ANT. Use a good-quality aerial cable (not supplied), corresponding to the relevant regulations.

Step 3

Connecting a VCR

We recommend that you tune in the VCR signal to programme number "0". For details, see "Presetting Channels Manually" on page 17.

See "Connecting Optional Equipment" on page 33 for more information.

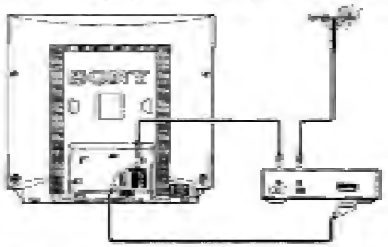

Step 4

Inserting the Batteries Into the Remote Commander

Respect your environment! Dispose of used batteries in an environmentally friendly way.

Step 5

Presetting Channels Automatically

With this function, the TV can automatically search and store up to 100 different channel numbers.

If you prefer manual presetting, refer to "Presetting Channels Manually" on page 17.

1 Plug into mains.
Press the power switch ⏻ on the TV set.

2 Press and hold the button ↦ D on the TV set until the automatic menu is displayed and the search starts.

After all available channels are stored, the normal TV picture is shown.

Note Channels are automatically stored as follows:

Programme 1	BBC1
Programme 2	BBC2
Programme 3	ITV
Programme 4	CH4 or S4C

TV Operation

This section explains functions used whilst watching TV. Most operations are carried out using the remote commander (numbers in circles). All basic functions are also available on the TV set (letters in boxes). Open the flap at the front of the Instruction Manual to see the illustrations of the Remote Commander and the TV set.

To	Press
Switch on	⏻ on TV
Switch off temporarily	⏻ TV is now in standby mode and ⏻ indicator on TV lights up.
Switch on from standby mode	▢, PROGR +/- or any number button
Switch off completely	⏻ on TV To save energy, switch off your TV completely when TV is not in use.
Select programmes	PROGR +/- or number buttons For double-digit number, press -/- - then the number e.g. For 23, press -/- - then 2 and 3.
Display on screen indications	i. Press again to make the indications disappear.
Adjust the volume	+ or -
Mute the sound	🔇. Press again to restore the sound.
Display the time (only available when teletext is broadcast)	⏲. Press again to make the display disappear.
View programmes in 16:9 mode	⊟. Press again to return to 4:3 mode.

TV Operation (continued)

To	Press
Tune in a channel temporarily	C ●. The indication "C" appears. Enter the double digit number. e.g. For 4, press 0 then 4.
View video input picture (see page 34 for detailed information)	⊡ ● E repeatedly until the desired video input appears. Press ▢ ● to restore the TV picture.
View teletext (see page 31 for detailed information)	
Switch on	⊜ ●
Select a page	three number buttons ● or ⊡ ● (for next page) or ⊡ ● (for previous page).
Use fastext	Push joystick ● to select a colour.
Switch off	▢ ●

Adjusting and Setting the TV Using the Menu

You can adjust and set various functions on the TV using the following remote commander buttons:

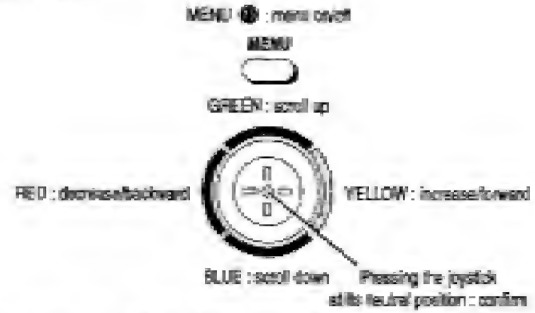

Choosing the Menu Language

This function enables you to change the language of the menu screens.

1 Press power switch ⏻ I on the TV. If the standby indicator ⏻ H on the TV is lit, press ▢ ● or a number button ● on the Remote Commander.

2 Press the MENU button ● on the remote commander.

3 Push to blue or green to select the language you want then push to yellow.

4 Press the MENU button ● to restore the normal TV picture.

Presetting Channels Automatically

You may have already preset the channels automatically by using the method shown on page 12. You can also preset channels automatically by using the remote commander as follows:

1 Press the MENU button ⊕.

2 Push joystick ⊕ to blue or green to select the symbol ⊟ on the menu screen then push to yellow.

3 Push to blue or green to select 'Auto Programme'.

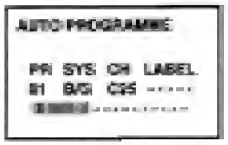

4 Push to yellow and hold until the automatic menu is displayed and the search starts.
After all available channels have been preset, the normal TV picture is shown.

Note: Channels are automatically stored as follows:

Programme 1	BBC1
Programme 2	BBC2
Programme 3	ITV
Programme 4	CH4 or S4C

Presetting Channels Manually

This function enables you to preset channels one by one to different programme numbers. This is also convenient for allocating programme numbers to various video input sources.

1 Press the MENU button ⊕.

2 Push joystick ⊕ to blue or green to select the symbol ⊟ on the menu screen then push to yellow.

3 Push to blue or green to select 'Manual Programme' then push to yellow.

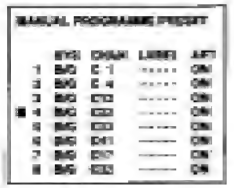

4 Push to blue or green to select on which programme number you want to preset a channel then push to yellow.

5 Push to blue or green to select the TV broadcast system (I) or a video input source (AV1, AV2,...) then push to yellow.

6 Select the first number digit of 'CHAN' then the second number digit of 'CHAN' with the number buttons ⊕ on the remote commander
or
Push joystick ⊕ to blue or green to search for the next available channel number.

7 If you want to store the channel number, go to step 8. If not, select a new channel number using the number buttons ⊕ on the remote commander or push to blue or green to resume the search.

8 Press the joystick ●.

9 Repeat steps 4 to 8 to preset other channels.

10 Press the MENU button ● to restore the normal TV picture.

Adjusting the Picture and Sound

Although the picture and sound are adjusted at the factory, you can adjust them to suit your own taste.

1 Press the MENU button ●.

2 Push joystick ● to blue or green to select [1] for picture control, or ♪ for sound control then push to yellow.

3 Push to blue or green to select the desired item then push to yellow.

4 Push to red or yellow to alter the item then press the joystick ●.
For the effect of each control, see the following tables.

5 Repeat steps 3 and 4 to adjust the other items.

6 Press the MENU button ● to restore the normal TV picture.

PICTURE CONTROL	Effect
Picture Mode	User —> Game —> Movie —> Sports —> Live In 'User' mode, you can preset Brightness, Colour, Sharpness and Hue (NTSC signals only) as follows: 1 Push joystick ● to blue or green to select the desired item then push to yellow. 2 Push to red or yellow to adjust then press the joystick ●. 3 Push to red to return to the PICTURE CONTROL menu.
Contrast	Darker —— ! —— Brighter
Reset	Resets picture to the factory preset levels.
Auto Picture	All the picture levels automatically change according to the surrounding lighting level. (Auto Picture Control)
Format	Wide screen effect (16:9)

Adjusting the Picture and Sound (continued)

SOUND CONTROL	Effect
Sound Mode	User —> Rock —> Jazz —> Pop In 'User' mode, you can preset Treble and Bass as follows. 1 Push joystick ● to blue or green to select the item then push to yellow. 2 Push to red or yellow to adjust then press the joystick ●. 3 Push to red to return to the 'SOUND CONTROL' menu.
Balance	Left —— I —— Right
Reset	Resets sound to the factory preset levels.
Bass Extension	Boosts bass by a fixed amount.
Surround Mode	Choice among special sound effects. Pro Logic —> Pseudo Stereo —> Spatial —> Club —> Theatre—> Hall —> Church —> Stadium —> Off
Dual Sound	A: Left channel —> B: Right channel —> stereo —> mono
Volume Offset	Presets the volume level for individual programmes. -12 —— 0 —— +12
Volume	Adjusts the headphone volume.
Dual Sound	Presets the headphone channels. A: Left channel —> B: Right channel —> stereo —> mono

Changing Modes Quickly

You can quickly change the Surround Mode or the Picture Mode without entering the 'SOUND CONTROL' or the 'PICTURE CONTROL' menu.

1 Press ● ❖ for the picture or ♪ ● for the sound.

2 Push joystick ● to blue or green to select the desired mode then push to yellow.

3 Press ● ❖ or ♪ ● again to restore the normal TV screen.

Manual Fine-Tuning

Normally, the automatic fine-tuning (AFT) function is operating.

If the picture is distorted however, you can manually fine-tune the TV to obtain a better picture reception.

1 Press the MENU button ●.

2 Push joystick ● to blue or green to select the symbol on the menu screen then push to yellow.

3 Push to blue or green to select 'Manual Programme' then push to yellow.

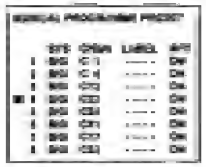

4 Push to blue or green to select the programme number which corresponds to the channel you want to manually fine-tune.

5 Push to yellow repeatedly until the AFT position changes colour.

6 Push to blue or green to change the frequency of the channel from -15 to +15.

7 Press the joystick ●.

8 Repeat steps 4 to 7 to fine-tune other channels.

9 Press the MENU button ● to restore the normal TV picture.

Sorting Programme Positions

This function enables you to move channels to different programme numbers.

1 Press the MENU button ●.

2 Push joystick ● to blue or green to select the symbol ⊟ on the menu screen then push to yellow.

3 Push to blue or green to select 'Programme Sorting' then push to yellow.

4 Push to blue or green to select the channel you want to move to another programme number then push to yellow.

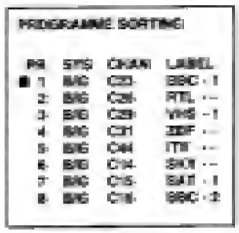

5 Push to blue or green to select the programme number to which you want to move the channel selected in step 4 then push to yellow.

6 Repeat steps 4 to 5 if you wish to move other channels to different programme numbers.

7 Press the MENU button ● to restore the normal TV picture.

Using Parental Lock

This function enables you to prevent undesirable broadcasts from appearing on the screen. We suggest you use this function to prevent children from watching programmes which you consider unsuitable.

1 Press the MENU button ●.

2 Push joystick ● to blue or green to select the symbol ⊟ on the menu screen then push to yellow.

3 Push to blue or green to select 'Parental Lock' then push to yellow.

4 Push to blue or green to select the channel you want to block then push to yellow. The symbol appears before the programme number to indicate that this channel is now blocked.

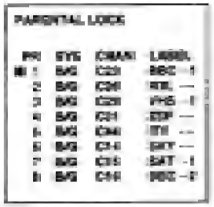

5 Repeat step 4 if you wish to block other channels.

6 Press the MENU button ● to restore the normal TV picture.

Note: To unblock, push to yellow after selecting the channel to unblock in the 'Parental Lock' menu.

Using the Sleep Timer

This function enables you to select a time period after which the TV automatically switches into standby mode.

1 Press the MENU button ●.

2 Push joystick ● to blue or green to select the symbol ⏲ on the menu screen then push to yellow.

3 Push to yellow.

4 Push to red or yellow to set time delay and press the joystick ●.

OFF 0:30 1:00 1:30 ..... 3:30 4:00

One minute before the TV switches into standby mode, a message is displayed on the screen.

5 Press the MENU button ● to restore the normal TV picture.

Skipping Programme Positions

This function enables you to skip unused programme positions when selecting them with the PROGR+/- buttons. However, you can still watch the channel of the skipped programme position by using the number buttons.

1 Press the MENU button ●.

2 Push joystick ● to blue or green to select the symbol ⊕ on the menu screen then push to yellow.

3 Push to blue or green to select 'Manual Programme' then push to yellow.

4 Push to blue or green to select the programme position you want to skip then push to yellow.

5 Push to blue or green until '- - -' appears in the 'SYS' position.

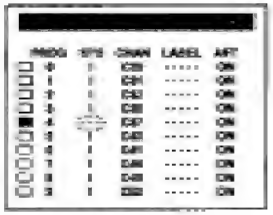

6 Press the joystick ●.

7 Repeat steps 4 to 6 to skip other programme positions.

8 Press the MENU button ● to restore the normal TV picture.

Captioning a Station Name

Names for channels are usually automatically taken from teletext if available. You can however name a channel or an input video source using up to five characters (letters or numbers).

1 Press the MENU button ❶.

2 Push joystick ❶ to blue or green to select the symbol on the menu screen then push to yellow.

3 Push to blue or green to select 'Manual Programme' then push to yellow.

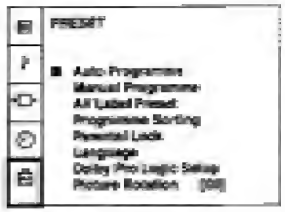

4 Push to blue or green to select the channel you wish to caption then push to yellow repeatedly until the first element of the 'LABEL' position is highlighted.

5 Push to blue or green to select a letter or number and push to yellow (select '-' for a blank). Select other characters in the same way.

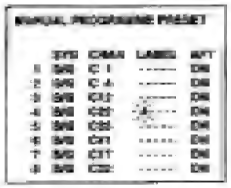

6 After selecting all the characters, press the joystick ❶.

7 Repeat steps 4 to 6 to caption names for other channels.

8 Press the MENU button ❶ to restore the normal TV screen.

Teletext

Most TV channels broadcast information via teletext. The index page of the broadcaster (usually page 100) gives you information on how to use the service.
Make sure you use a TV channel with a strong signal, otherwise teletext errors may occur.

Switching Teletext on and off

1 Select the channel which carries the teletext service you wish to view.

2 Press ❶ to display teletext.
If no teletext signal is broadcast, the indication P100 is displayed on a black screen.

3 Input three digits for the page number using the number buttons ❶.
The page counter searches for the page and after some seconds the page is displayed.

4 Press ❶ to return to the normal TV picture.

Using Other Teletext Functions

To	Press
Access the next or preceding teletext page	❶ for the next page or ❶ for the preceding page
Mix the mode	❶ when in teletext mode. Now the teletext page is superimposed on the TV programme. Press again to return to the normal teletext display.
Freeze a teletext subpage	❶. Press once again to cancel.
Reveal hidden information (eg: answers to a quiz)	❶. Press once again to cancel.

Favourite page system

You can store up to four of your favourite teletext pages per Teletext service. In this way you have quick access to the pages you frequently use.

Storing pages

1 Use the number buttons ⊛ to select the page you would like to store.

2 Press ⊕ ⊛ twice.
The colour prompts at the bottom of the screen flash.

3 Push the joystick ⊛ to store the selected page.
The page is now stored on this colour.

Repeat steps 1 to 3 for the other 3 pages.

Displaying the Favourite Pages

1 Press ⊕ ⊛.

2 Push the joystick ⊛ to the colour on which the desired page is stored.

Make sure you press ⊕ ⊛, otherwise the normal Fastext facility operates.

Using Fastext

(only available, if the TV station broadcasts Fastext signals)

With Fastext you can access pages with one key stroke. When Fastext is broadcast, a colour-coded menu appears at the bottom of the screen. The colours of this menu correspond to the red, green, yellow and blue marks on the Remote Commander.

Push the joystick ⊛ to the colour mark which corresponds to the colour-coded menu. The page is displayed after some seconds.

Connecting Optional Equipment

There is a wide range of optional equipment you can connect to your TV. Refer to the illustrations on the front flap page of this manual.

Symbol	Acceptable input signals	Available output signals
1 L	Normal audio/video and RGB	Audio/video from TV tuner
2/ 2 M	Normal audio/video and S video source	Audio/video from selected
3, 3 D 3 C	Normal audio/video and S video	No output
R	No inputs Audio from selected source.	

About S video input

Video signals may be separated into Y (luminance) and C (chrominance) signals. Separating the two signals prevents interference and thus improves the picture quality.

Notes on connections:

If the picture or sound is distorted, move the VCR away from the TV.

When connecting a monaural VCR, connect only the white jack to both the TV and VCR.

Selecting Input and Output Signals

This section explains how to view the video input picture and how to select the output signal. You can use direct access buttons ➔ ● E to select the input or the menu system to select input and output.

Selecting With Direct Access Buttons

Press ➔ ● E repeatedly.
Press ○ ● to restore the normal TV picture.

Symbol on the screen	Input Signal
➔ 1	Audio / video through Euro AV connector L
➔	RGB through Euro AV connector L
➔ 2	Audio / video through Euro AV connector J
➔ 2	S video through Euro AV connector J
➔ 3	Audio / video through the phono jacks C
➔ 3	S video through the phono jacks C

Selecting With the Video Connection Menu

1 Press the MENU button ●.

2 Push joystick ● to blue or green to select ➔□+ for "Video Connection" then push to yellow.

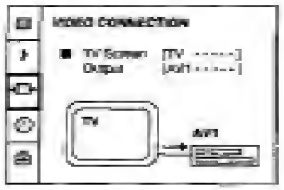

3 Push to blue or green to select input or output then push to yellow ●.

4 Push to blue or green repeatedly to select the desired input or output source then press the joystick ●.

5 Press the MENU button ● to restore the normal TV picture.

Note: If you select 'Auto' for output, the output source automatically becomes the same as the desired input source.

Using AV Label Preset

This function enables you to label the input sources using up to five characters (letters or numbers).

1 Press the MENU button ●.

2 Push joystick ● to blue or green to select the symbol 🧰 on the screen then push to yellow.

3 Push to blue or green to select 'AV Label Preset' then push to yellow.

4 Push to blue or green to select the desired input source then push to yellow.

5 Push to blue or green to select a letter or number then push to yellow (select '-' for a blank).
Select other characters in the same way.

6 After selecting all the characters, press the joystick ●.

7 Repeat steps 4 to 6 label other input sources.

8 Press the MENU button ● to restore the normal TV screen.

Remote Control of Other Sony Equipment

You can control other Sony remote controlled equipment using the buttons ❷ on the Remote Commander.

1 Set the VTR 1/2/3 MDP selector according to the equipment

VTR 1: Beta VCR	VTR 2: 8mm VCR
VTR 3: VHS VCR	MDP: Video Disk Player

2 Use the buttons ❷ to operate the equipment.

Notes:
- If your video equipment has a COMMAND MODE selector, set this selector to the same position as the VTR 1/2/3 MDP selector on the TV Remote Commander.
- If the equipment does not have a certain function, the corresponding button on the Remote Commander does not work.

Troubleshooting

Here are some simple solutions to the problems which affect the picture and sound.

Problem	Solution
No picture (screen is dark), no sound	•Plug the TV in. •Press ⏻ ❶ on the TV. (If ⏻ indicator ❶ is on, press ☐ ❷ or a programme number ❷ on the Remote Commander.) •Check the aerial connection. •Check if the selected video source is on. •Turn the TV off for 3 or 4 seconds then turn it on again using ⏻ ❶.
Poor or no picture (screen is dark), but good sound	•Press MENU ❷ to enter the 'PICTURE CONTROL' menu and adjust 'Picture', 'Brightness' and 'Colour'.
Poor picture quality when watching an RGB video source.	•Press ⊡ ❷ ❸ repeatedly to select ⊡.
Good picture but no sound	•Press ⊿ + ❷ ❸. •If 🔇 is displayed on the screen, press 🔇 ❶.
No colour for colour programmes	•Press MENU ❷ to enter the 'PICTURE CONTROL' menu, select 'Reset' then press the joystick ❷.
Remote Commander does not function.	•Replace the batteries

If you continue to have problems, have your TV serviced by qualified personnel. Never open the casing yourself.

SECTION 2
DISASSEMBLY

2-1. REAR COVER REMOVAL

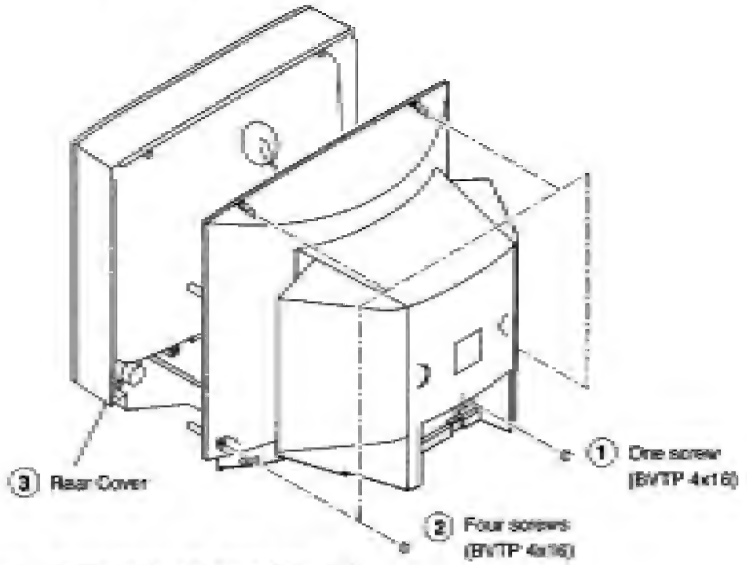

2-2. CHASSIS ASSY REMOVAL

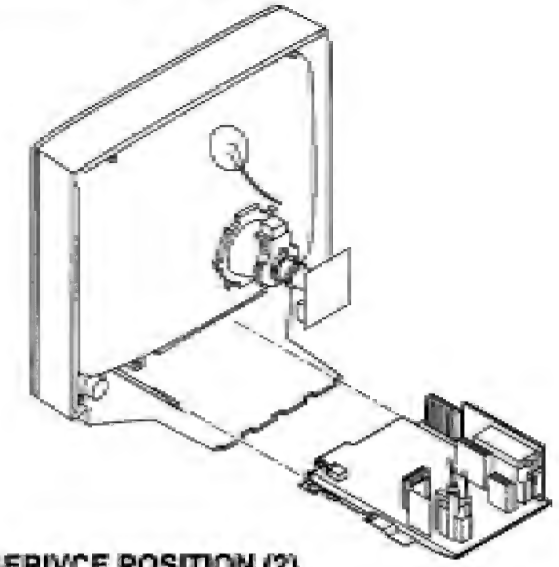

2-3-1. SERVICE POSITION (1)

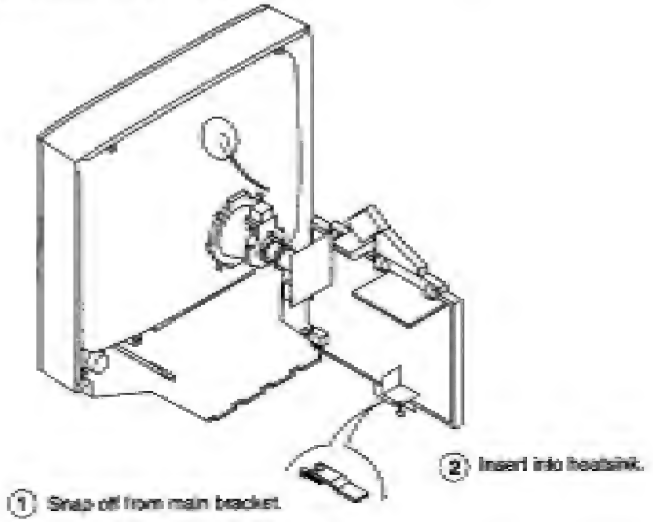

2-3-2. SERIVCE POSITION (2)

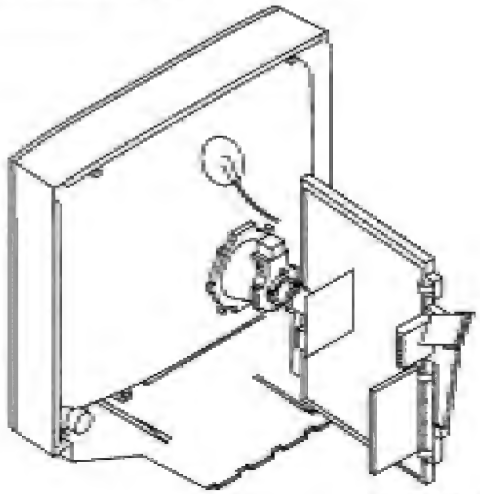

2-4. WIRE DRESSING

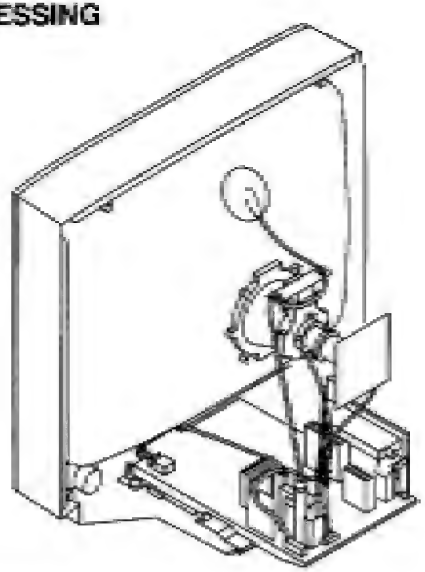

2-5. A BOARD REMOVAL

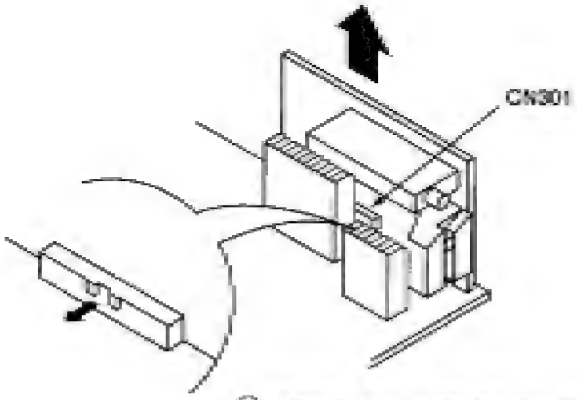

① Remove CN301 before removing A board.

2-6. A EXTENSION BOARD

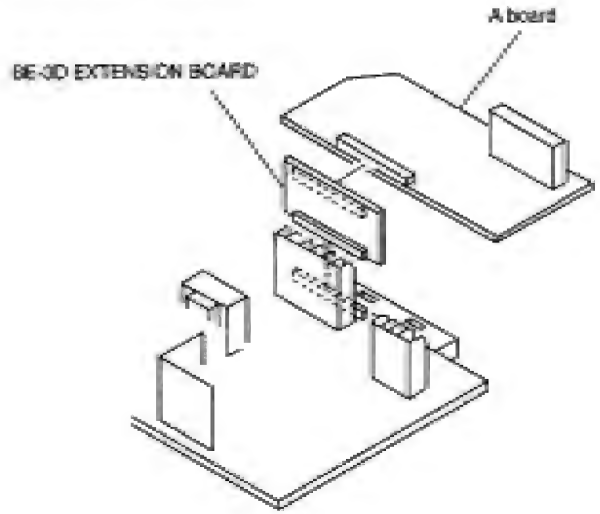

2-7. A1 EXTENSION BOARDS

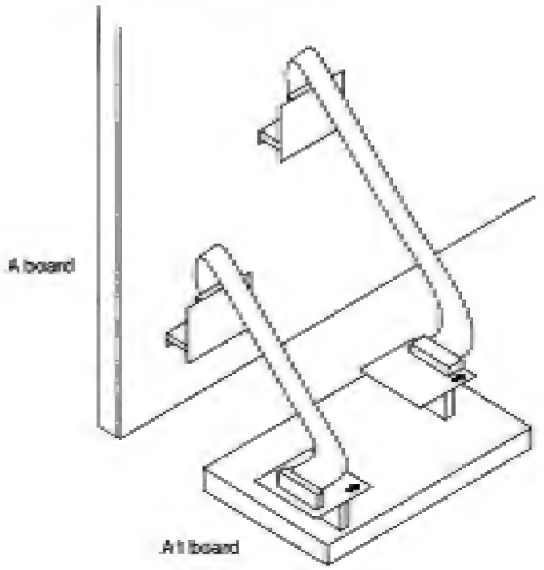

2-8. PICTURE TUBE REMOVAL

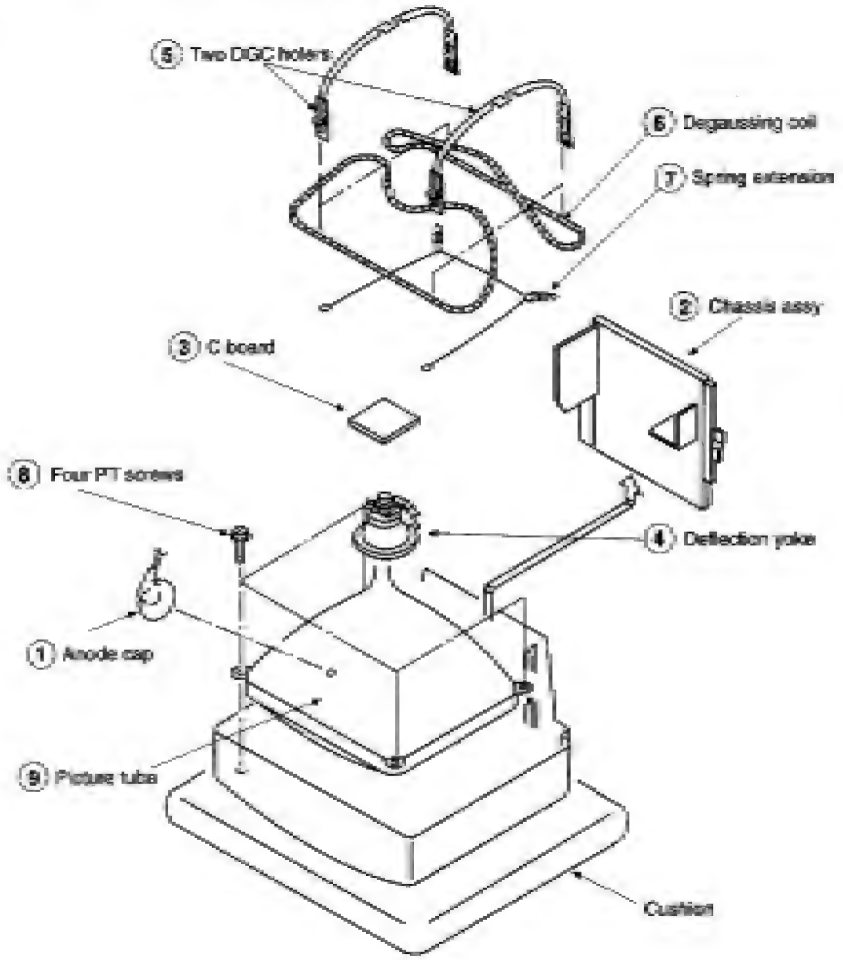

• REMOVAL OF ANODE-CAP

Note: Short circuit the anode of the picture tube and the anode cap to the metal chassis, CRT shield or carbon paint on the CRT, after removing the anode.

• REMOVING PROCEDURES:

① Turn up one side of the rubber cap in the direction indicated by the arrow ②

② Using a thumb pull up the rubber cap firmly in the direction indicated by the arrow ③

③ When one side of the rubber cap is separated from the anode button, the anode-cap can be removed by turning up the rubber cap and pulling it up in the direction of the arrow ④

• HOW TO HANDLE AN ANODE-CAP

① Don't damage the surface of anode-cap with sharp shaped material !
② Don't press the rubber hardly not to hurt inside of anode-caps !
A metal fitting called as shutter-hook terminal is built into the rubber.
③ Don't turn the foot of rubber over hardly !
The shutter-hook terminal will stick out or damage the rubber.

REMOVAL AND REPLACEMENT OF THE MAIN-BRACKET BOTTOM PLATES.

(1) REMOVING THE PLATES

In the event of servicing being required to the solder side of the D Board printed circuit, the bottom plates fitted to the main chassis bracket require to be removed. This is performed by cutting the gates with a sharp wire cutter at the locations shown and indicated by arrows.

Note : There are 5 plates fitted to the main bracket and secured by 4 or 6 gates. Only remove the necessary plate to gain access to the circuit board.

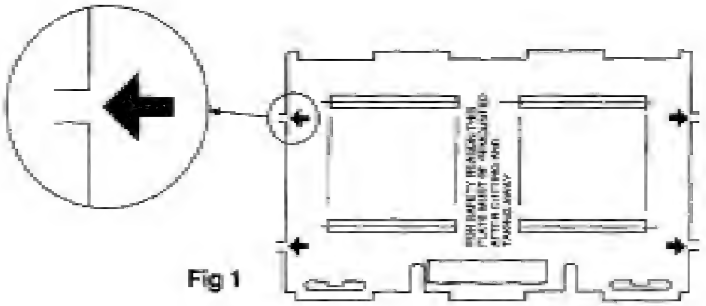

Fig 1

(2) REFITTING THE PLATES

Because the plates differ in size it is important that the correct plates are refitted in their original location.
The plates are identified by markings A-B-C-D-E on their top side.

1. Identify the plate by locating its marking.
2. Turn the plate over noting where the marking is located.
3. Locate the corresponding marking indicated on the main chassis bracket. See Fig 2.
4. Refit the plate as indicated in Fig 3 with the markings located next to each other.

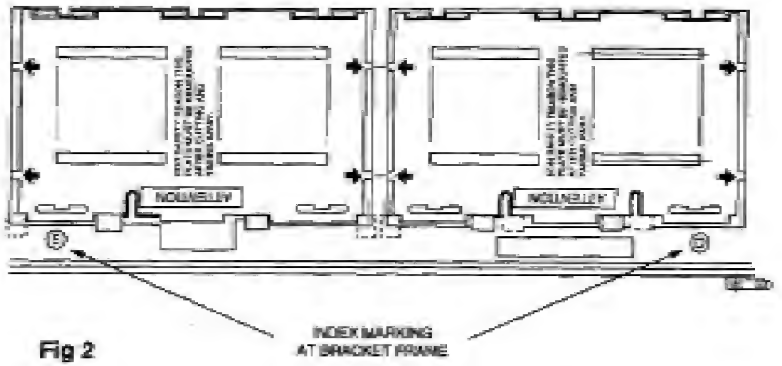

Fig 2

In the event of the plates requiring to be removed at a later stage, this can be achieved by inserting a screwdriver in the snap-recess indicated as in Fig 4 and lifting out.

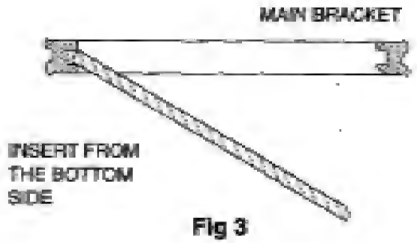

Fig 3

Fig 4

SECTION 3
SET - UP ADJUSTMENTS

- When complete readjustment is necessary or a new picture tube is installed, carry out the following adjustments.
- Unless there are specific instructions to the contrary, carry out these adjustments with the rated power supply.
- Unless there are specific instructions to the contrary, set the controls and switches to these settings :

  ◑ Contrast ..... 80% (or remote control normal)
  ☼ Brightness 50%

- Carry out the following adjustments in this order :

1. Beam landing
2. Convergence
3. Focus
4. White balance

Note: Testing equipment required.
1. Color bar/pattern generator
2. Degausser
3. DC power supply
4. Digital multimeter
5. Oscilloscope

Preparation:
- In order to reduce the influence of geomagnetism on the set's picture tube, face it east or west.
- Switch on the set's power and degauss with the degausser.

3-1. BEAM LANDING

1. Input the white signal with the pattern generator.
   CONTRAST } normal
   BRIGHTNESS }
2. Set the pattern generator raster signal to red.
3. Move the deflection yoke forward and adjust with the purity control so that the red is at the centre and the blue and the green take up equally sized areas on each side. (See Fig. 3-1 - 3-3)
4. Move the deflection yoke forward and adjust so that the entire screen becomes red. (See Fig. 3-1)
5. Switch the raster signal to blue, then to green and verify the condition.
6. When the position of the deflection yoke has been decided, fasten the deflection yoke with the screws.
7. If the beam does not land correctly in all the corners, use a magnet to adjust it. (See Fig. 3-4)

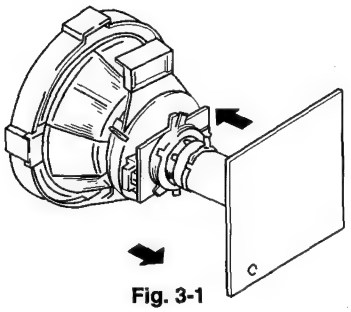

Fig. 3-1

Fig. 3-2

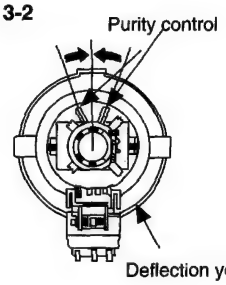

Fig. 3-3

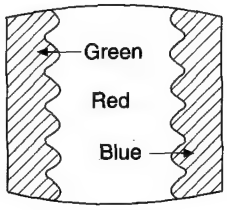

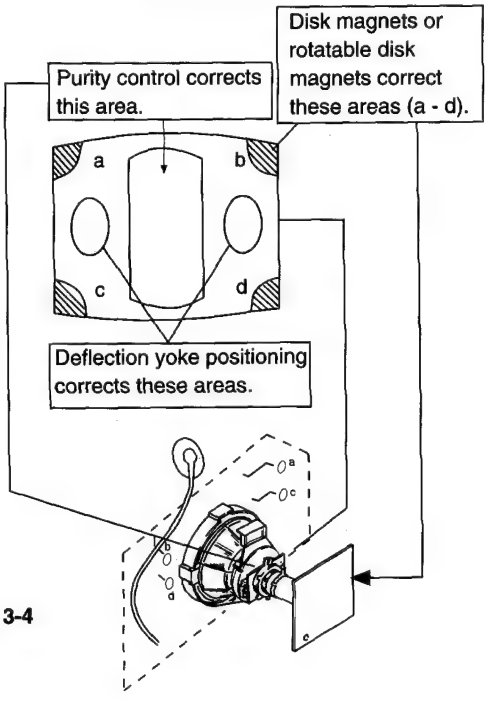

Fig. 3-4

3-2. CONVERGENCE

Preparation:

- Before starting this adjustment, adjust the focus, horizontal size, and vertical size.
- Minimize the brightness setting.
- Provide a dot pattern.

(1) Horizontal and vertical static convergence

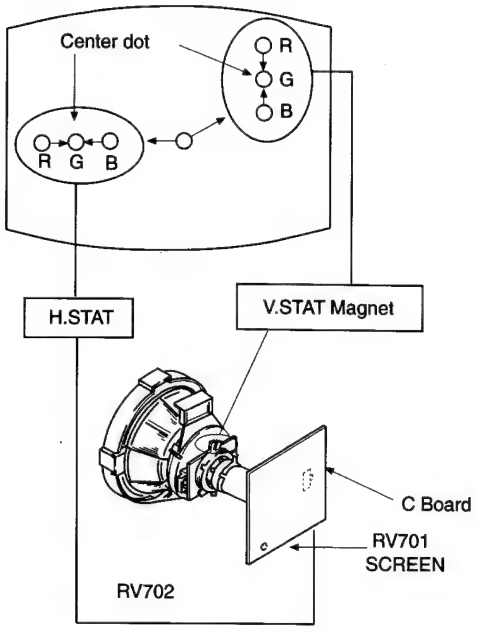

1. (Moving horizontally), adjust the H.STAT control so that the red, green, and blue points are on top of each other at the centre of the screen.
2. (Moving vertically), adjust the V.STAT magnet so that the red, green, and blue points are on top of each other at the centre of the screen.
3. If the H.STAT variable resistor cannot bring the red, green, and blue points together at the centre of the screen, adjust the horizontal convergence with the H.STAT variable resistor and the V.STAT magnet in the manner given below.
   (In this case, the H.STAT variable resistor and the V.STAT magnet influence each other)

- Tilt the V.STAT magnet and adjust the static convergence by opening or closing the V.STAT magnet.

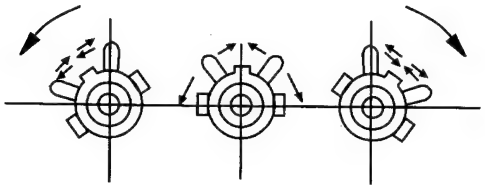

4. If the V.STAT magnet is moved in the direction of the (a) and (b) arrows, the red, green, and blue points move as shown below.

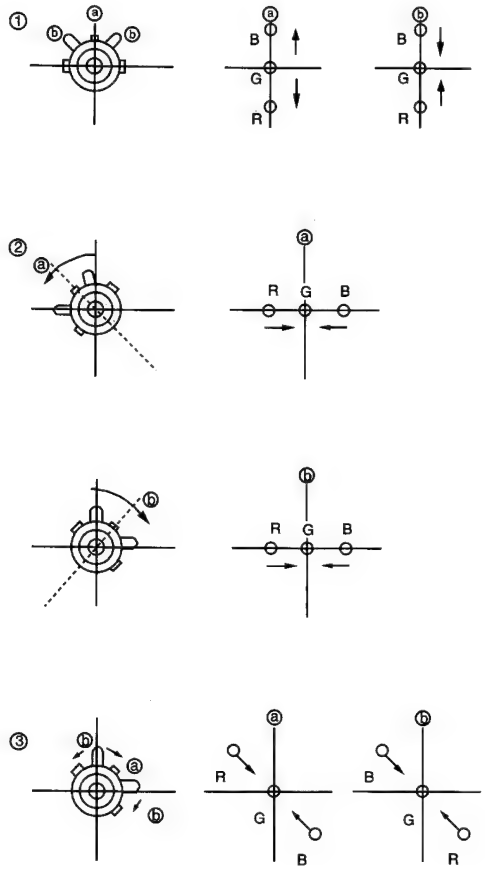

- Operation of BMC (Hexapole) Magnet

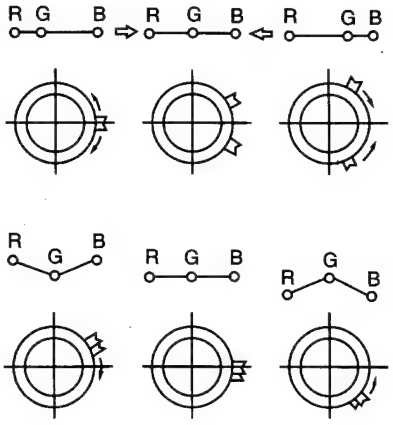

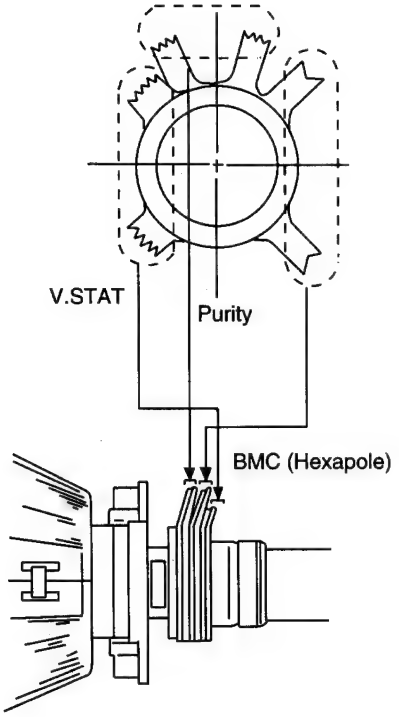

- The respective dot position resulting from moving each magnet interact, so be sure to perform adjustment while tracking.
  Use the H.STAT VR to adjust the red, green, and blue dots so they coincide at the centre of the screen (by moving the dots in the horizontal direction).

(2) Dynamic convergence adjustment.

Preparation:

- Before starting this adjustment, adjust the horizontal static convergence and the vertical static convergence.

1. Slightly loosen the deflection yoke screws.
2. Remove the deflection yoke spacer.
3. Move the deflection yoke as shown in the figure below and optimize the convergence.
4. Tighten the deflection yoke screws.
5. Re-install the deflection yoke spacer.

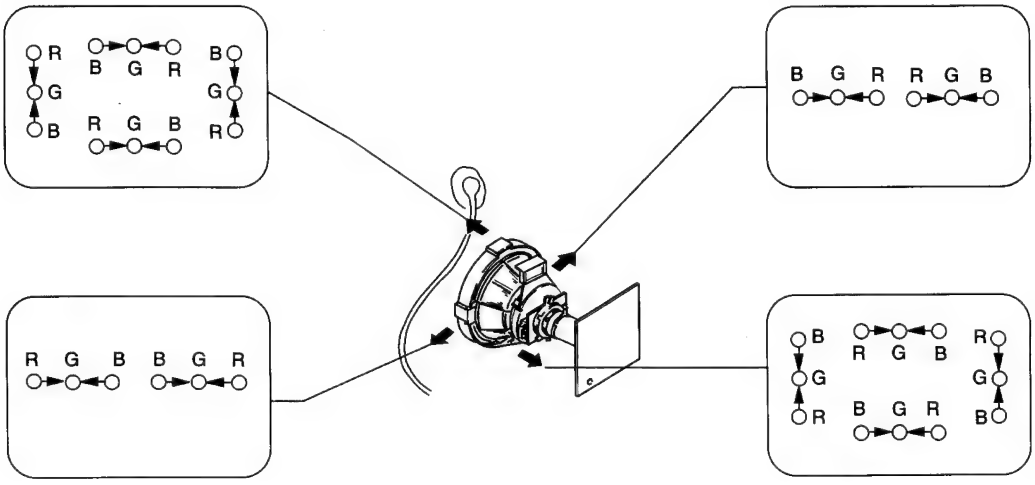

(3) Screen corner convergence.

If you are unable to adjust the corner convergence properly, correct them with the use of permalloy assemblies.

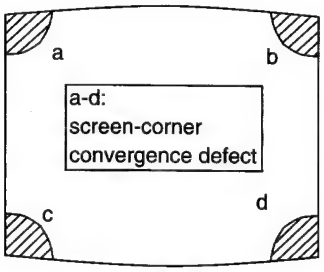

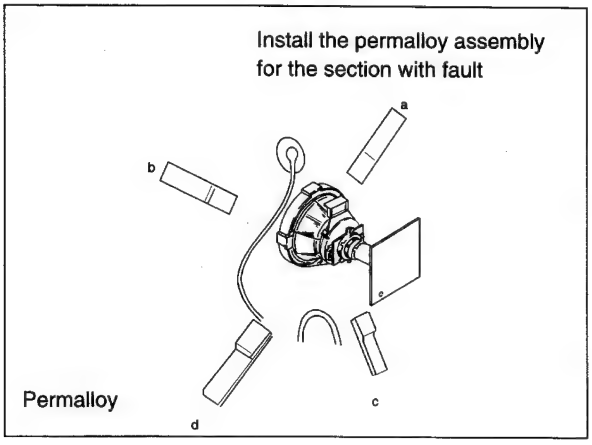

3-3. WHITE BALANCE

G2 Setting

1. Switch the set into AV mode (apply no signal to the AV connectors).
2. Connect a Volt Meter to Test Point 1 on the A board.
3. Adjust RV01 to obtain a voltage of 3.0V ±0.3V.

White balance adjustment

1. Input an all white signal from the pattern generator.
2. Enter into the service mode.
3. Enter into Picture Adjustment service menu.
4. Select sub-contrast and adjust to 7.
5. Select the Green Drive and adjust so that the white balance becomes optimum.
6. Select the Blue Drive and adjust so that the white balance becomes optimum.
7. Press the TV button to return to TV operation.

PICTURE ADJUSTMENT

AFC mode	1
REF position	3
SCP BGR	1
SCP BGF	1
Trap Fo	7
Sub contrast	Adj
Sub colour	Adj
Sub brightness	Adj
Sub hue	Adj
Green drive	Adj
Blue drive	Adj
Green cutoff	Adj
Blue cutoff	Adj
Gamma	0
Pre / overshoot	0
Y delay	5

SECTION 4
CIRCUIT ADJUSTMENTS

4-1. ELECTRICAL ADJUSTMENTS

Service adjustment to this model can be performed with the supplied remote commander RM-862.

HOW TO ENTER INTO SERVICE MODE

1. Turn on the main power switch of the set and enter into standby mode.
2. Press the following sequence of buttons on the Remote Commander.

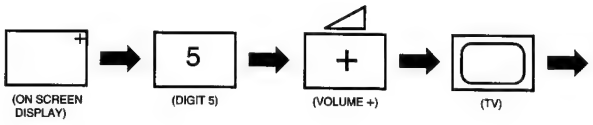

"TT-- " will appear in the top right corner of the screen. Other status information will also be displayed.

3. Press MENU on the commander to obtain the following menu on the screen.

TEST MENU

> Picture adjustment
Geometry
Wide
MSP
IC status
Current TV status

4. Move to the corresponding adjustment using the ◇ button on the commander.
5. Move the button to the right ◇ to enter the selected adjustment.
6. Turn off the power to quit the service mode when adjustments are completed.

PICTURE ADJUSTMENT

AFC mode	1
REF position	2
SCP BGR	1
SCP BGF	1
Trap Fo	0
Sub contrast	Adj
Sub colour	Adj
Sub brightness	Adj
Sub hue	Adj
Green drive	Adj
Blue drive	Adj
Green cutoff	Adj
Blue cutoff	Adj
Gamma	0
Pre / overshoot	0
Y delay	3

GEOMETRY ADJUSTMENT

V Size	Adj
V Position	Adj
S Correction	Adj
V Linearity	Adj
H Size	Adj
H Position	Adj
Pin Amp	Adj
Pin Phase	Adj
AFC Bow	Adj
AFC Angle	Adj
EHT V	Adj
EHT H	Adj
Corner Pin	Adj

WIDE

V Aspect	47
V Scroll	31
Upper V Lin	0
Lower V Lin	0
Left Blanking	1
Right Blanking	11

MSP	
AGC ON/OFF	ON
Constant gain CDB	0
FM prescale FMP	36
Zwei mono-st WHI	36
Zwei st-mono WLO	18
Zwei mono-bi WMH	36
Zwei bi-mono WLO	18
Time zwei WML	41
Fawct limit	10
Fawct soll init FAW	12
Fawer tol	2
Nicam Err Max CCT	10
Nicam Err Min	0
Nicam Prescale NIP	97
Time Nicam	31
Carrier mute CRM	OFF
Audio clock ACO	HIZ
Scart prescale	25
Scart volume	64

IC STATUS (CXA2000 / CXA2040)	
CXA2000	
H lock	1
IKR	1
VNG	0
X-RAY	0
Colour system	3
CV1 Sync	1
CXA2040	
Sync sep	1
S1 mode pin	01
S2 mode pin	01
TUNER	
Tuner status	01101011

TV STATUS	
Text system	C TEXT/TV TEXT
Dolby	NO/YES
Text language set	WEST/EAST/RUSSIAN
Menu language set	WEST/EAST/RUSSIAN
Destination	B/D/U/K/L/E/A/R
Scart 16:9	OFF/ON
RGB priority	OFF/ON
Ageing	OFF/ON
Size	29/25
Colour trap sw	SECAM/ALL
Velocity mod	ON/OFF
AFT STATUS	WINDOW/HIGH/LOW

SUB BRIGHTNESS ADJUSTMENT

1. Input a Phillips pattern.
2. Set the picture control to minimum.
3. Enter into the Picture Adjustment Service Menu.
4. Adjust the Sub-Brightness data so that there is barely a difference between the 0 IRE and 10 IRE signal.

SUB CONTRAST ADJUSTMENT

1. Input a video that contains a small 100% area on a black background.
2. Set the picture control to maximum.
3. Connect an oscilloscope to pin 3 of CN301 (A board).
4. Enter into the Picture Adjustment Service Menu.
5. Adjust the Sub-contrast data to obtain a black to white amplitude of 2.50 volts.

SUB COLOUR ADJUSTMENT

1. Receive a PAL Colour Bar video signal.
2. Connect an oscilloscope to pin 3 of CN301 (A board).
3. Enter into the Picture Adjustment Service Menu.
4. Adjust the sub colour data so that cyan, magenta and blue colour bars are of equal height.

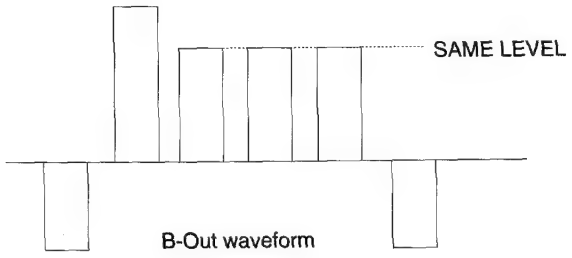

NOTE: The data shown in the TV STATUS table is dependant on destination, screen size and country.

SYSTEM B/G, D/K, I & L I.F ADJUSTMENT

1. Input an off air signal of between 60-100dBuV / 75 ohm terminated, via the tuner socket.
2. Enter into the I.F adjustment service mode (i.e. " TT 59 ") to fix the I.F frequency to 38.9 MHz.
3. Enter into the service mode and select "Current TVStatus".
4. Adjust the I.F coil (LV01) until the "AFT Status" indicates a " Window " condition.

SYSTEM L BAND 1 I.F ADJUSTMENT

1. Input an off air signal of between 60-100dBuV / 75 ohm terminated, via the tuner socket.
2. Enter into the I.F adjustment service mode (i.e. " TT 59 ") to fix the I.F frequency to 34.2 MHz.
3. Enter into the service mode and select "Current TVStatus".
4. Adjust the RV02 until the "AFT Status" indicates a " Window " condition.

TUNER AGC ADJUSTMENT

1. Receive a signal of 63dBuV / 75 ohm terminated via the tuner socket.
2. Measure the voltage at test point 1 (A board).
3. Adjust RV01 to obtain a voltage of 3.0V ± 0.3V.

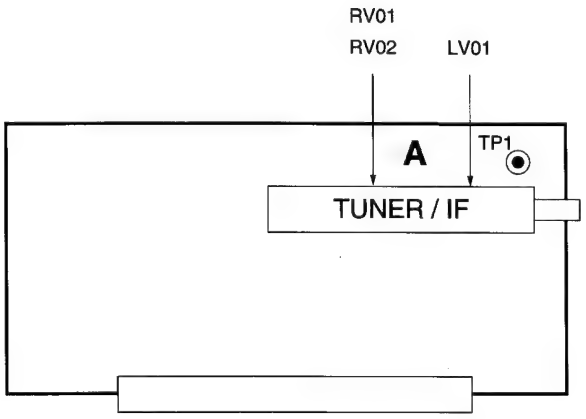

- A Board component side -

DEFLECTION SYSTEM ADJUSTMENT

1. Enter into the Geometry Adjustment Service Menu.
2. Select and adjust each item in order to obtain the optimum image.

GEOMETRY ADJUSTMENT

V Size	Adj
V Position	Adj
S Correction	Adj
V Linearity	Adj
H Size	Adj
H Position	Adj
Pin Amp	Adj
Pin Phase	Adj
AFC Bow	Adj
AFC Angle	Adj
EHT V	Adj
EHT H	Adj
Corner Pin	Adj

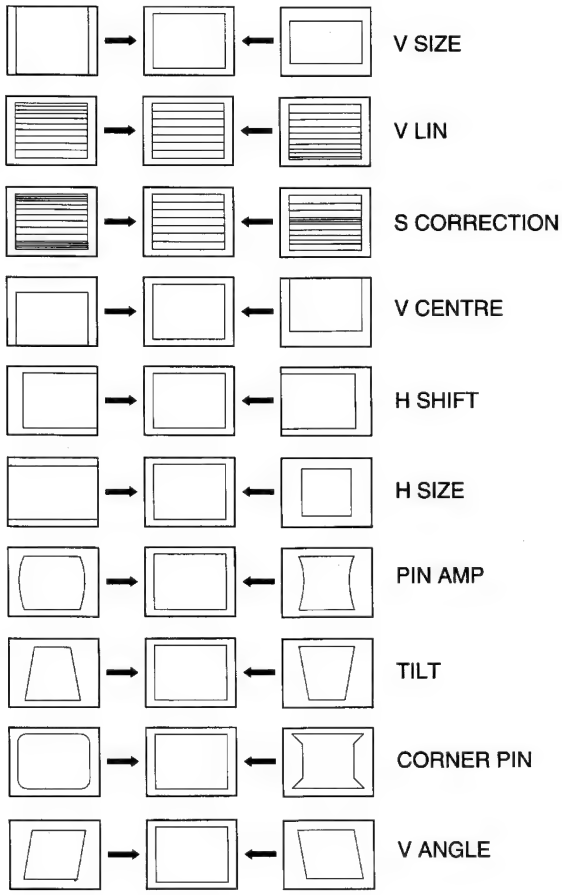

4-2. TEST MODE 2:

Is available by pressing Test button twice, OSD " TT " appears. The functions described below are available by pressing the two numbers. To release the Test mode 2, press 0 twice, or switch the TV into stand-by mode.

00	Switch test mode 2 off
01	Picture maximum
02	Picture minimum
03	Volume 30%
04	Set service menu mode
05	Set production menu mode
06	Volume 80%
07	Set ageing condition
08	Set shipping condition
09	Language reset
10	No function
11	Adjustment without OSD
12	Dummy
13	Display TV configuration
14	Forced AV 6:9 mode
15	Reset LPM from ROM data
16	copy LPM to reset memory
17	Preset label for AV sources
18	RGB priority on/off
19	Clear all preset labels
20	No function
21	Sub contrast
22	Sub colour
23	Sub brightness
24	Set destination = U
25	Set destination = D
26	Set destination = B
27	Set destination = K
28	Set destination = L
29	Set destination = E
30	No function
31	Set destination =A
32	Dummy
33	Auto AGC
34	Dummy
35	Manual AGC adjust

36-40	Dummy
41	Re-initialise NVM
42	Production use only
43	Initialise geometry settings
44	Initialise all favourite pages = 100
45	Channel locks = off
46	Dealer commander mode
47	Default MSP settings
48	Restore NVM test byte
49	Delete NVM test byte
50-60	No function
61	Turn on Dolby Pro Logic mode
62	White noise to left speaker
63	White noise to right speaker
64	White noise to centre speaker
65	White noise to rear speaker
66	Set standard stereo mode
67	Set Pro Logic normal mode
68	Set Pro Logic wide mode
69	Set Pro Logic phantom mode
70	No function
71	Picture rotation on/off
72	Dolby register settings
74	No function
75	Reset picture colour balance
76	Reset picture geometry
77	Reset sound settings
78	Reset error codes in the NVM
79-99	No function

4-3. BE-3D SELF DIAGNOSTIC SOFTWARE

The identification of errors within the BE-3D chassis is triggered in 1 of 2 ways :- 1: Bus busy or 2: Device failure to respond to IIC. In the event of one of these situations arising the software will first try to release the bus if busy (Failure to do so will report with continuous flashing LED) and then communicate with each device in turn to establish if a device is faulty. If a device is found to be faulty the relevant device number will be displayed through the led (Series of flashes which must be counted) See Table 1, non fatal errors are reported with this method.

Table 1

ERROR	LED ERROR COUNT
Protection circuit trip < ANY TIME >	02
IIC SCL LOW < POWER UP ONLY >	03
IIC SDA LOW < POWER UP ONLY >	04
IIC SDA & SCL LOW < POWER UP ONLY >	05
Jungle/Choroma controller no acknowledge < POWER UP ONLY >	06
Video Switch no acknowledge < POWER UP ONLY >	07
Tuner no acknowledge	08
MSP no acknowledge	09
NVM no acknowledge	10
M3L TXD LOW < POWER UP ONLY >	11
M3L RXD LOW < POWER UP ONLY >	12
M3L ENABLE LOW < POWER UP ONLY >	13
M3L TXD & RXD LOW < POWER UP ONLY >	14
Compact Text test fail < POWER UP ONLY >	15
AV switch cannot power on reset	16
Cannot initialise jungle	17
NVM acknowledge fail after initialisation	18
Multiple devices with no acknowledge < POWER UP ONLY >	19
Compacttext run-time failure	20
AVSWITCH response failure after power up	21
JUNGLE/CHROMA controller response failure after power up	22
CompactText does not respond	23

Flash Timing Example : e.g. error number 3.

Stby LED

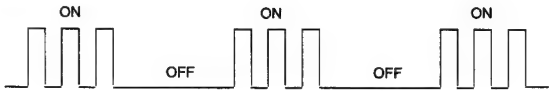

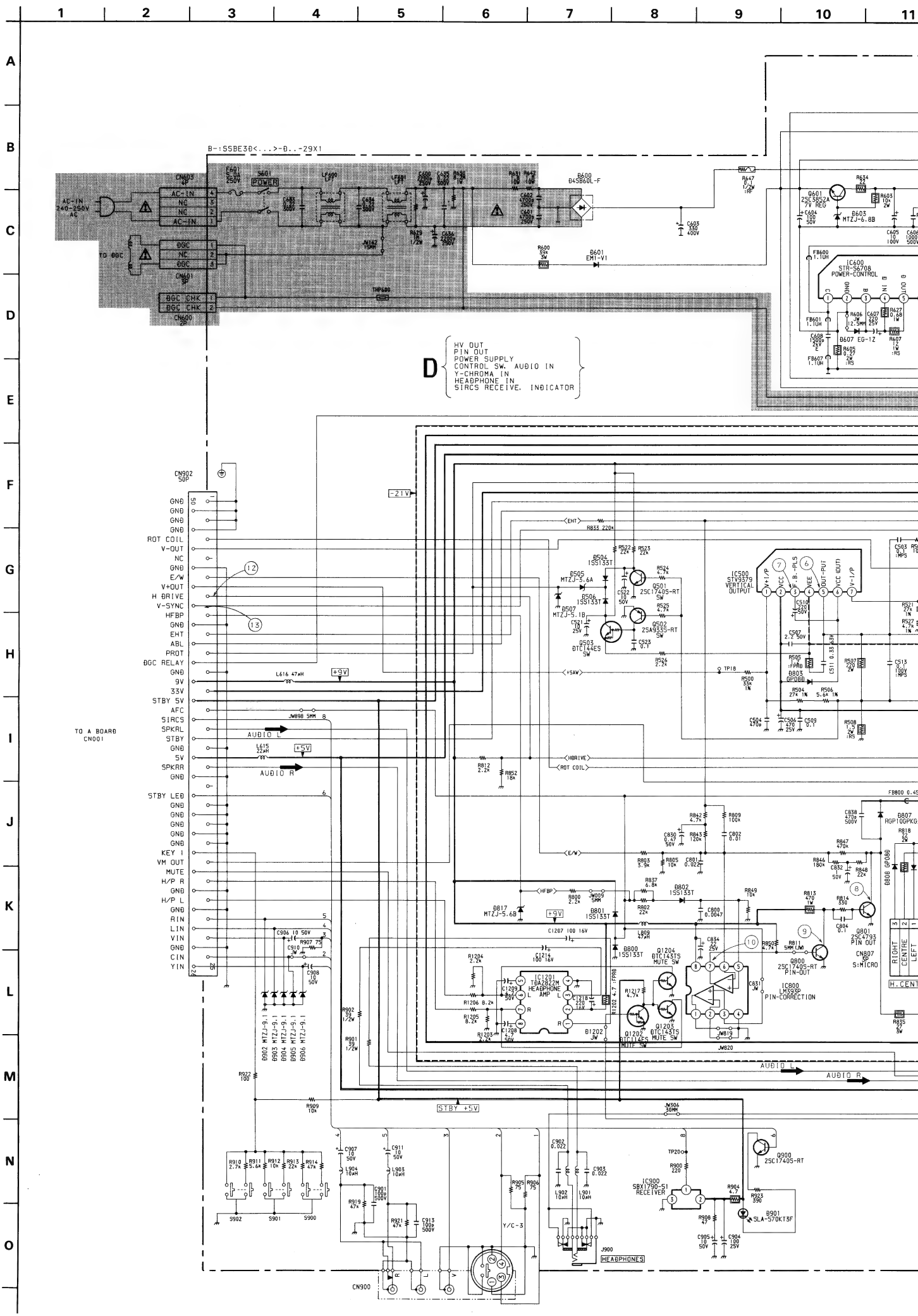

B-:SSBE3D<...>-D..-29X1
AC-IN 240-250V AC
CN603 4P
AC-IN
NC
NC
AC-IN
TO DGC
DGC
NC
DGC
CN601 3P
DGC CHK
DGC CHK
CN600 2P
S601 POWER
D600 D4SB60L-F
D601 EM1-V1
Q601 2SC3852A 7V REG
D603 MTZJ-6.8B
IC600 STR-S6708 POWER-CONTROL
D607 EG-1Z
D
HV OUT
PIN OUT
POWER SUPPLY
CONTROL SW. AUDIO IN
Y-CHROMA IN
HEADPHONE IN
SIRCS RECEIVE. INDICATOR
CN902 50P
GND
ROT COIL
V-OUT
NC
E/W
V+OUT
H DRIVE
V-SYNC
HFBP
EHT
ABL
PROT
DGC RELAY
9V
33V
STBY 5V
AFC
SIRCS
SPKRL
STBY
5V
SPKRR
STBY LED
KEY 1
VM OUT
MUTE
H/P R
H/P L
RIN
LIN
VIN
CIN
YIN
TO A BOARD CN001
AUDIO L
AUDIO R
-21V
+9V
+5V
IC500 STV9379 VERTICAL OUTPUT
Q501 2SC1740S-RT SW
Q502 2SA9335-RT SW
Q503 DTC144ES SW
IC1201 TDA2822M HEADPHONE AMP
Q1204 DTC143TS MUTE SW
Q1203 DTC143TS MUTE SW
Q1202 DTC114ES MUTE SW
IC800 LM393P PIN-CORRECTION
Q800 2SC1740S-RT PIN-OUT
Q801 2SC4793 PIN OUT
CN807 3P S:MICRO
RIGHT
CENTRE
LEFT
H.CENT
STBY +5V
Q900 2SC1740S-RT
IC900 SBX1790-51 RECEIVER
D901 SLA-570KT3F
J900 HEADPHONES
CN900
S902
S901
S900
Y/C-3

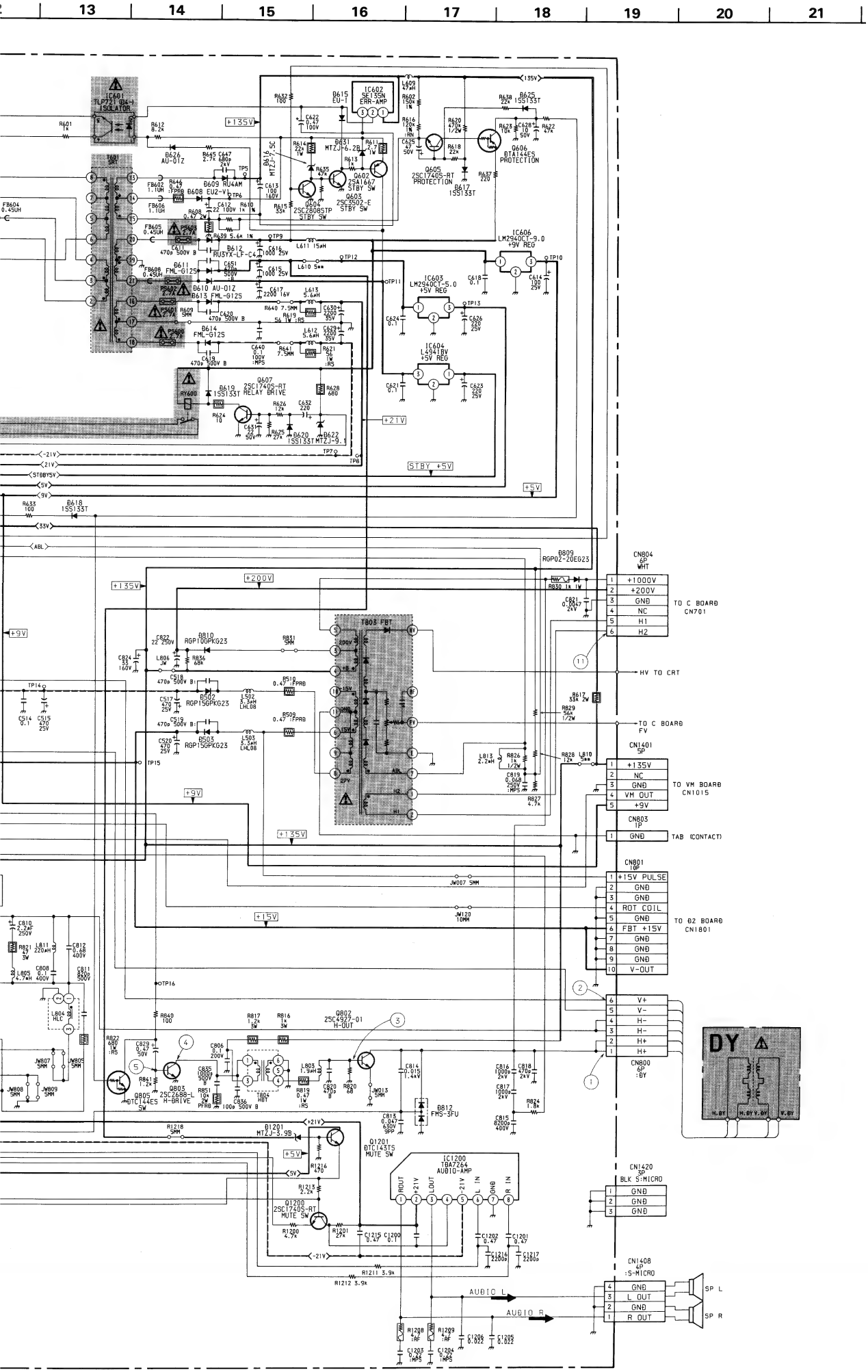

13
14
15
16
17
18
19
20
21
IC601 TLP721 (B4-) ISOLATOR
IC602 SE135N ERR-AMP
IC603 LM2940CT-5.0 +5V REG
IC604 L4941BV +5V REG
IC606 LM2940CT-9.0 +9V REG
Q605 2SC1740S-RT PROTECTION
Q606 DTA144ES PROTECTION
Q607 2SC1740S-RT RELAY DRIVE
Q602 2SA1667 STBY SW
Q603 2SC3502-E STBY SW
Q604 2SC2808STP STBY SW
Q802 2SC4927-01 H-OUT
Q803 2SC2688-L H-DRIVE
Q805 DTC144ES SW
Q1201 DTC143TS MUTE SW
Q1200 2SC1740S-RT MUTE SW
IC1200 TDA7264 AUDIO-AMP
T803 FBT
CN804 6P WHT
+1000V
+200V
GND
NC
H1
H2
TO C BOARD CN701
HV TO CRT
TO C BOARD FV
CN1401 5P
+135V
NC
GND
VM OUT
+9V
TO VM BOARD CN1015
CN803 1P
GND
TAB (CONTACT)
CN801 10P
+15V PULSE
GND
GND
ROT COIL
GND
FBT +15V
GND
GND
GND
V-OUT
TO D2 BOARD CN1801
V+
V-
H-
H-
H+
H+
CN800 6P :DY
DY
CN1420 3P BLK S:MICRO
GND
GND
GND
CN1408 4P :S-MICRO
GND
L OUT
GND
R OUT
SP L
SP R
AUDIO L
AUDIO R

D BOARD
TRANSISTOR VOLTAGE TABLE

Transistor Voltage Table			
Ref No	B Base	C Collector	E Emitter
Q501	-0.1	0.2	-
Q502	0.1	-5.8	-
Q503	-5.8	-12.0	-12.0
Q602	72.0	7.5	72.7
Q603	0	72.0	-
Q604	0.7	-	-
Q605	0.5	-	0.3
Q606	-	-	12.0
Q607	-	12.0	-
Q800	0.2	3.1	-
Q801	0.3	17.0	-
Q802	-0.2	143.3	-
Q803	-0.6	99.8	-
Q805	-	3.6	-
Q900	-	5.4	-
Q1200	2.9	21.5	4.6
Q1201	3.4	5.0	3.0
Q1202	2.8	-	-

D BOARD IC VOLTAGE TABLE

IC Voltage Table		
Ref No	Pin No	Voltage (V)
IC500	1	1.5
	2	15.0
	3	-12.3
	4	-14.0
	5	0.1
	6	15.2
	7	1.4
IC600	1	170.0
	2	-62.4
	3	-62.6
	4	-62.2
	5	-62.0
	6	-62.6
	7	-62.4
	8	-62.0
	9	-58.0
IC601	1	64.3
	2	63.0
	3	-62.5
	4	-58.6
IC602	1	135.0
	2	63.2
	3	-0.1
IC800	3	0.9
	5	1.5
	6	2.0
	7	0.2
	8	9.0
IC1200	2	21.7
	4	21.5
	5	-21.7
IC1201	1	4.0
	2	9.0
	3	4.0
	5	0.5
	8	0.5

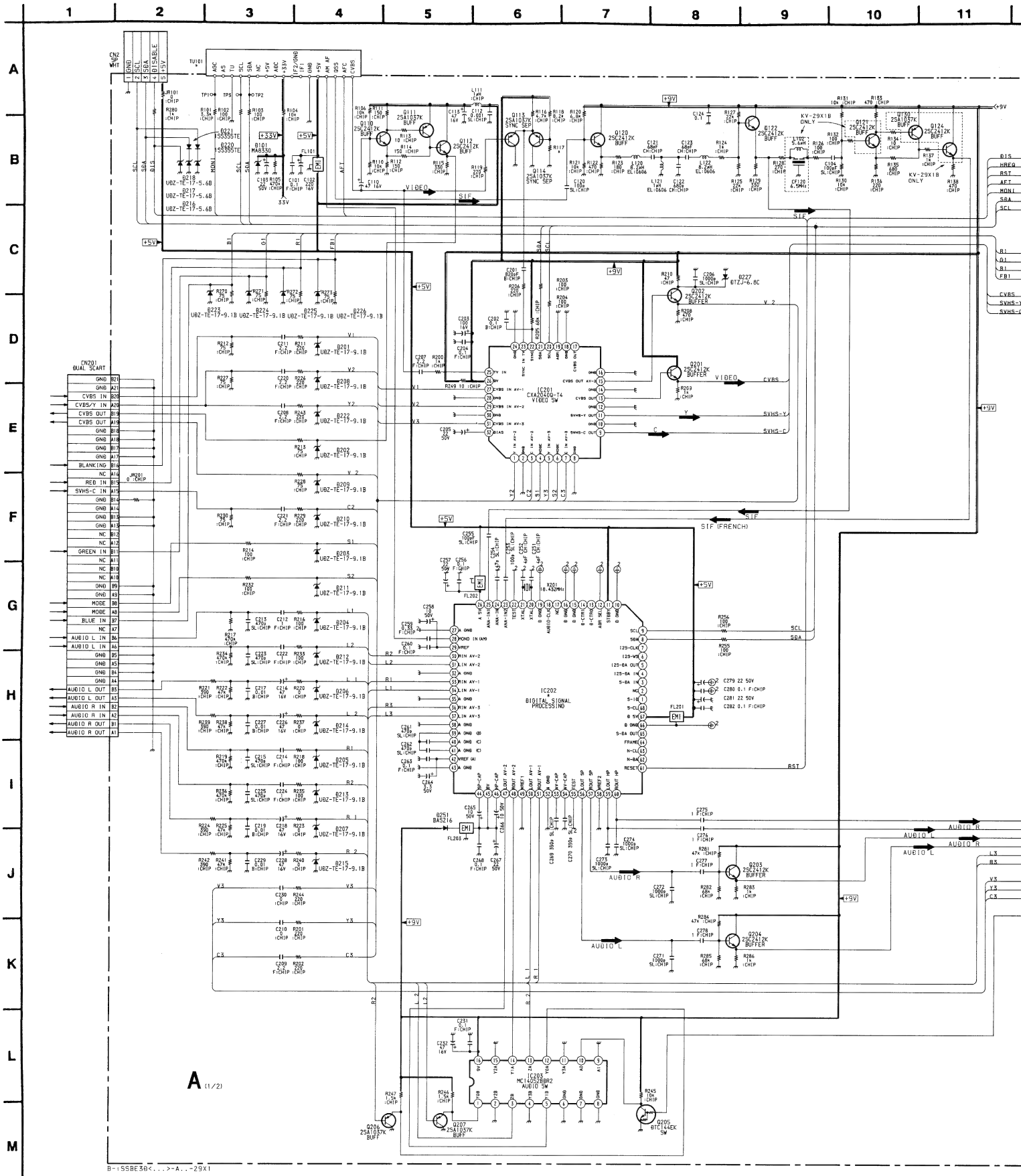

B-:SSBE3B<...>-A..-29X1

A BOARD * MARK

Ref. No. \ Model	29X1A	29X1B	29X1D	29X1E	29X1K	29X1L	29X1R	29X1U
C370	—	2.2UF	2.2UF	2.2UF	2.2UF	—	2.2UF	—
C372	—	0.1UF	0.1UF	0.1UF	0.1UF	—	0.1UF	—
C373	—	0.22UF	0.22UF	0.22UF	0.22UF	—	0.22UF	—
D370	—	BAS216	BAS216	BAS216	BAS216	—	BAS216	—
IC3	TMS27PC010A-15FMBE101	TMS27PC010A-15FMBE101	TMS27PC010A-15FMBE101	TMS27PC010A-15FMBW101	TMS27PC010A-15FMBE101	TMS27PC010A-15FML	TMS27PC010A-15FML	TMS27PC010A-15FMBW101
IC202	MSP3400C-PS	MSP3410-15	MSP3400C-PS	MSP3410-15	MSP3400C-PS	MSP3410-15	MSP3400C-PS	MSP3410-15
IC303	—	TDA8395T	TDA8395T	TDA8395T	TDA8395T	—	TDA8395T	—
R13	150	—	150	150	150	150	150	150
R14	150	—	150	150	150	150	150	150
R15	150	—	150	150	150	150	150	150
R16	100	—	100	100	100	100	100	100
R17	100	—	100	100	100	100	100	100
R117	1.8K	1.8K	1.8K	1.8K	1.8K	1.8K	1.8K	2.0K
TU101	TUVIF (AEP)	TUVIF (FR)	TUVIF (AEP)	TUVIF (AEP)	TUVIF (AEP)	TUVIF (AEP)	TUVIF (AEP)	TUVIF (UK)

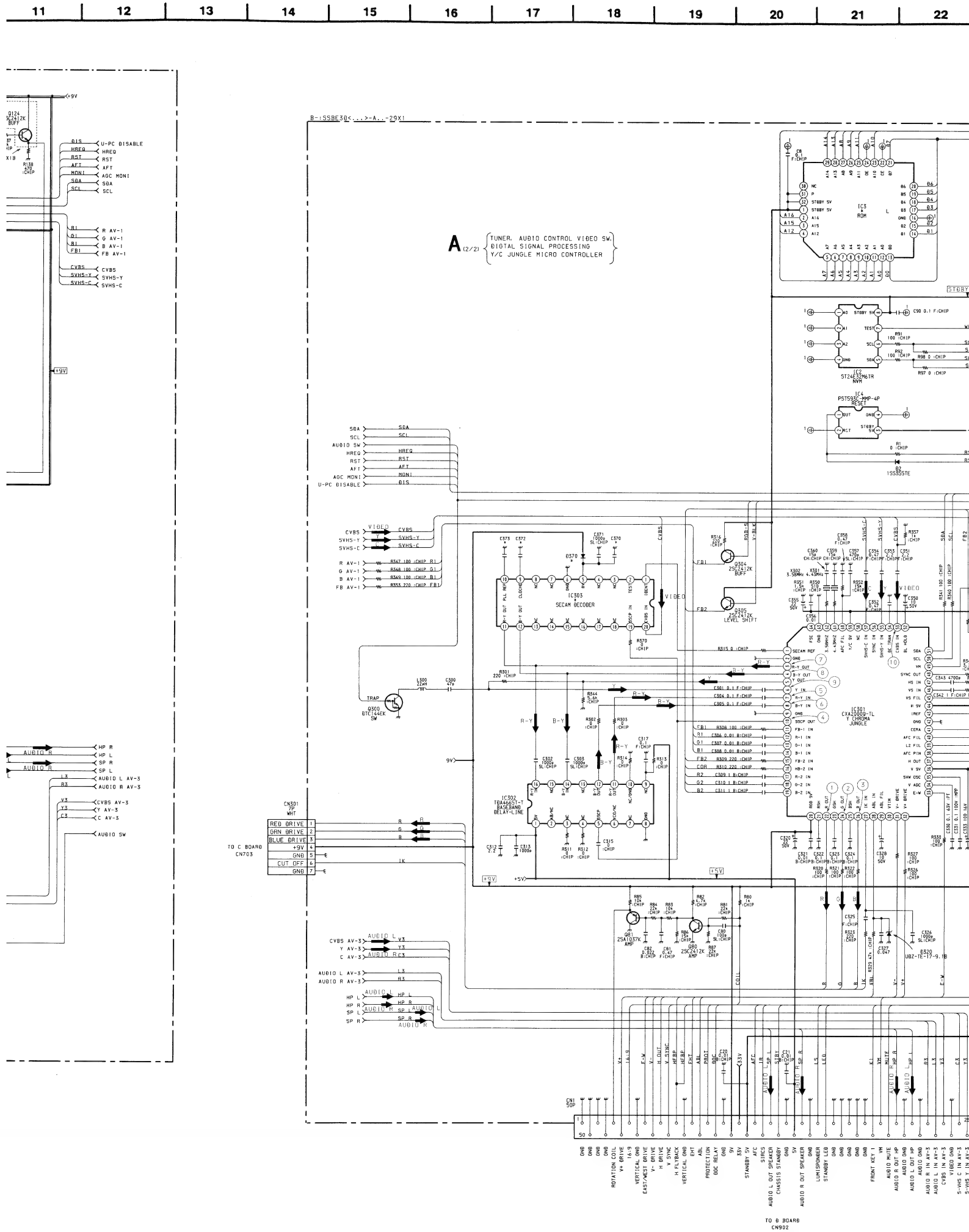

11
12
13
14
15
16
17
18
19
20
21
22
B-:SSBE30<...>-A..-29X1
A (2/2) TUNER, AUDIO CONTROL VIDEO SW, DIGITAL SIGNAL PROCESSING Y/C JUNGLE MICRO CONTROLLER
IC3 ROM
IC2 ST24E32M6TR NVM
IC4 PST593C-MMP-4P RESET
IC303 SECAM DECODER
IC301 CXA2000Q-TL Y CHROMA JUNGLE
IC302 TDA4665T-T BASEBAND DELAY-LINE
Q304 2SC2412K BUFF
Q305 2SC2412K LEVEL SHIFT
Q300 DTC144EK SW
Q81 2SA1037K AMP
Q80 2SC2412K AMP
D320 UDZ-TE-17-9.1B
CN301 7P WHT
RED DRIVE
GRN DRIVE
BLUE DRIVE
+9V
GND
CUT OFF
GND
TO C BOARD CN703
TO B BOARD CN902
U-PC DISABLE
HREQ
RST
AFT
AGC MONI
SDA
SCL
R AV-1
G AV-1
B AV-1
FB AV-1
CVBS
SVHS-Y
SVHS-C
AUDIO SW
HP R
HP L
SP R
SP L
AUDIO L AV-3
AUDIO R AV-3
CVBS AV-3
Y AV-3
C AV-3

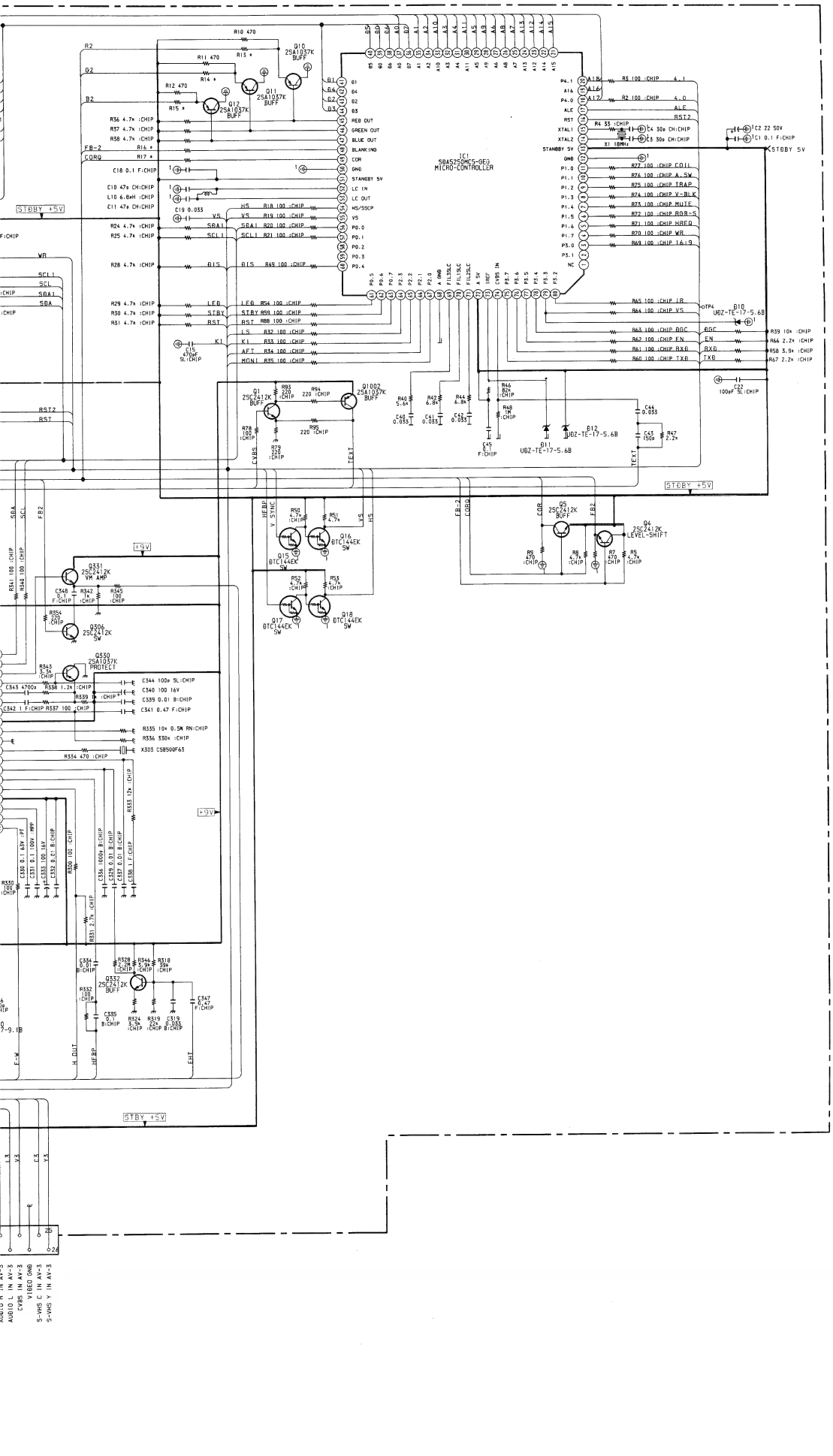

A (1/2) BOARD IC VOLTAGE TABLE

IC Voltage Table		
Ref No	Pin No	Voltage (V)
IC201	13	4.4
	15	4.4
	20	3.5
	21	2.7
	22	4.9
	23	4.4
	24	0
	25	4.4
	26	8.8
	32	4.4
IC202	4	2.8
	6-7	0.1
	8	3.0
	9	3.6
	11	4.7
	13	4.7
	20-21	2.4
	23	0.2
	25	1.5
	26	4.8
	28	3.8
	29	2.6
	39-42	3.8
	44	7.1
	45	8.0
	46	7.1
	47-48	3.8
	53-54	3.8

A (2/2) BOARD TRANSISTOR VOLTAGE TABLE

Transistor Voltage Table			
Ref No	B Base	C Collector	E Emitter
Q1	3.7	4.8	3.1
Q4	0.1	4.8	-
Q5	0.7	4.8	4.0
Q15	-	4.3	-
Q16	4.3	0.2	-
Q17	0.4	3.5	-
Q18	3.5	0.7	-
Q80	2.6	2.2	-
Q81	2.4	-	3.0
Q304	-	4.8	-
Q305	-	4.8	-
Q330	4.5	-	5.1
Q331	6.3	8.8	5.7
Q332	3.1	8.8	2.5
Q1001	4.4	-	-

A (1/2) BOARD TRANSISTOR VOLTAGE TABLE

Transistor Voltage Table			
Ref No	B Base	C Collector	E Emitter
Q110	1.8	8.2	1.2
Q112	1.5	8.8	0.8
Q113	1.8	-	-
Q114	5.4	6.0	-
Q120	84.3	8.8	3.7
Q121	1.5	5.4	0.9
Q122	5.4	8.8	4.7
Q124	-	8.8	-
Q201	4.4	8.8	3.7
Q202	4.4	8.8	3.7

A BOARD IC301 CXA2000Q-TL

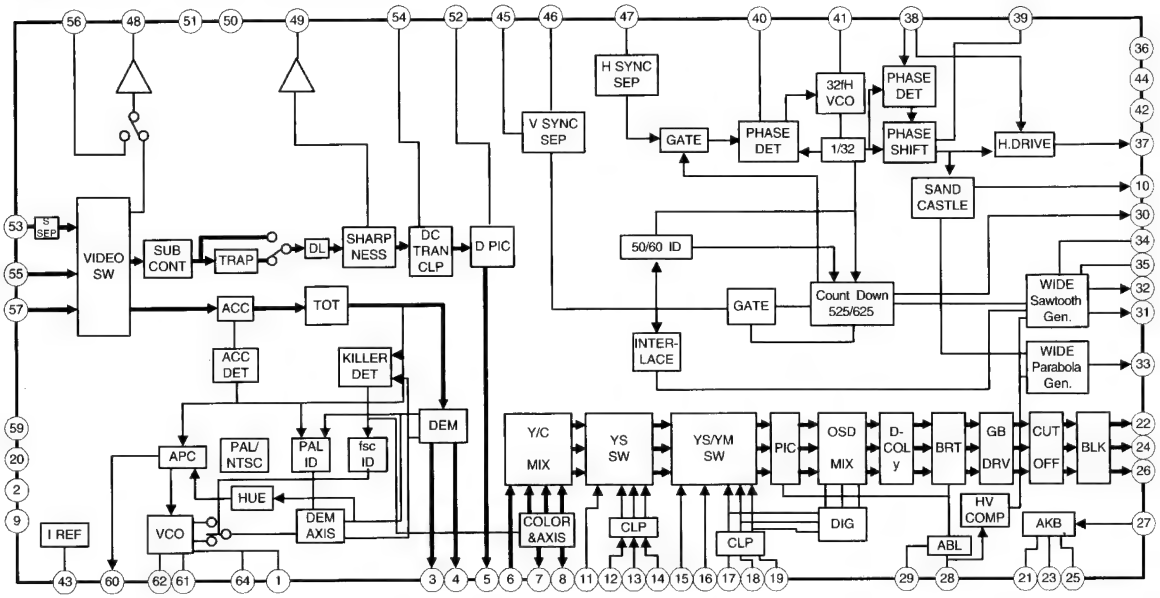

A BOARD IC202 MSP3410/MSP3400

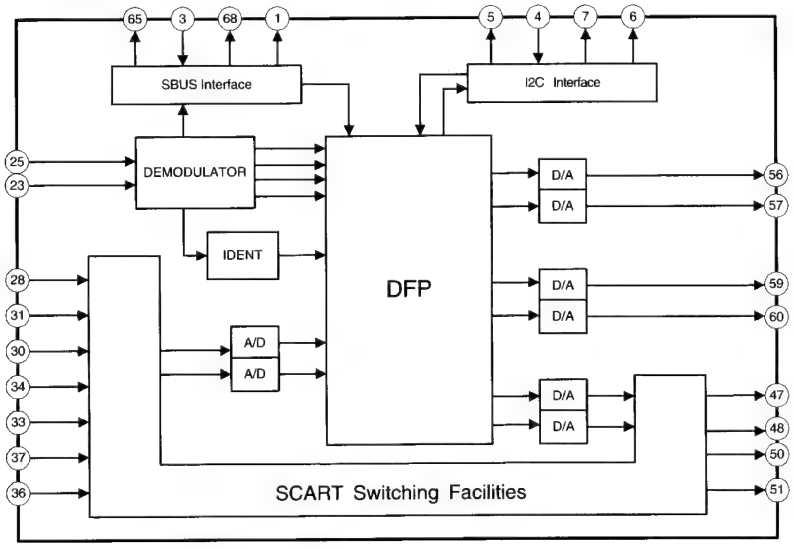

A BOARD IC201 CXA2040Q

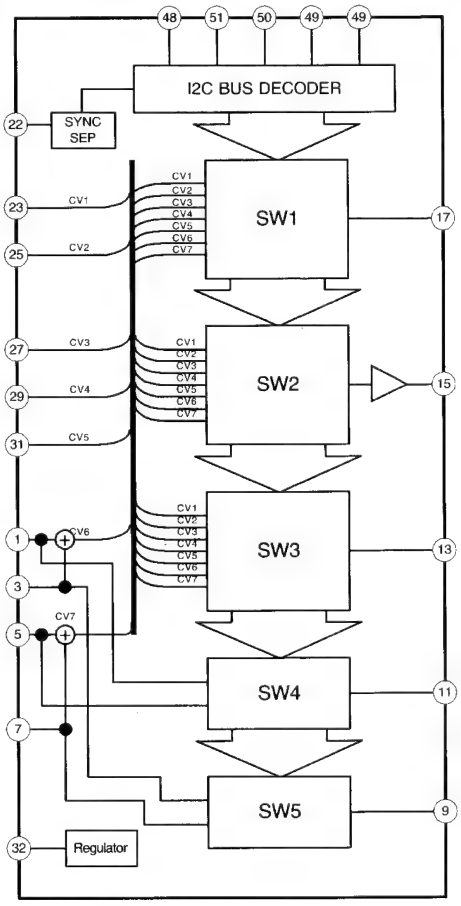

A BOARD IC4 PST593C

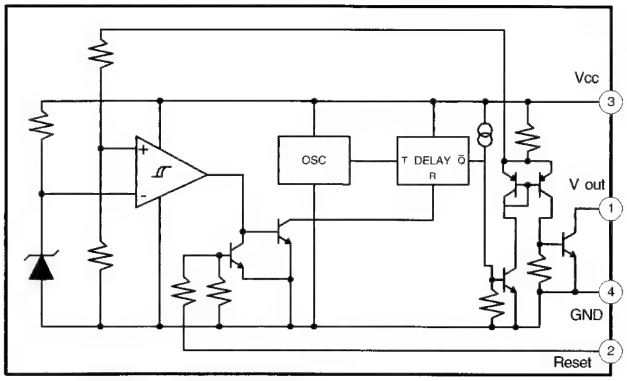

D BOARD IC500 STV9379

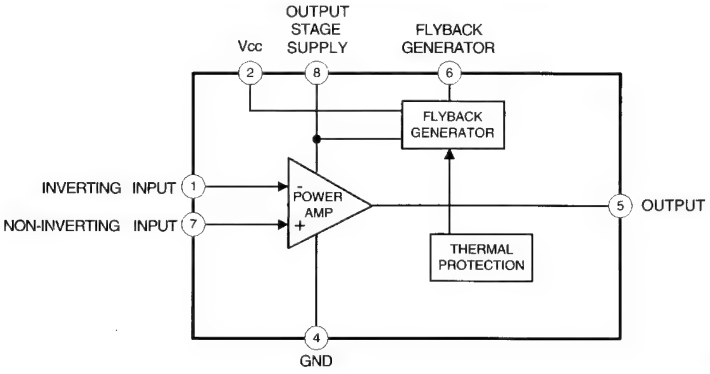

D BOARD IC1200 TDA7264

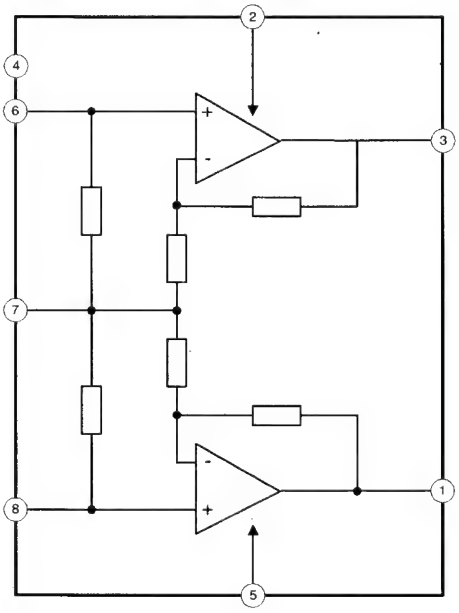

D BOARD IC600 STR-S6708

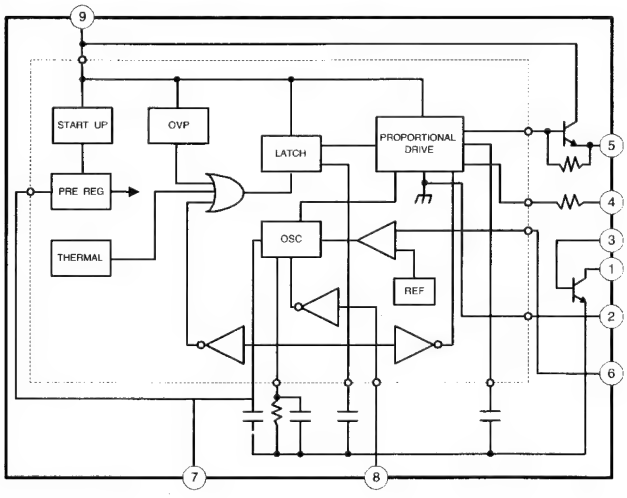

5-4. SEMICONDUCTORS

CXA2000Q-TL

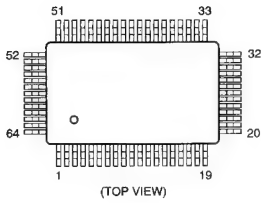

CXA2040Q-T4

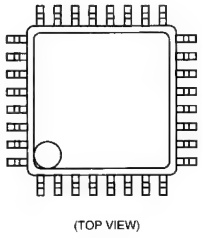

KM62256CLG

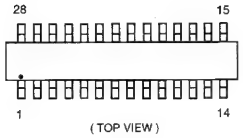

LM393P
TDA2822M
µPC393C

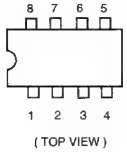

LM2940CT-5.0
LM2940T-9.0
µPC2405HF

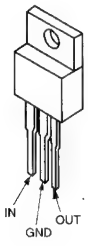

MC14052BDR2

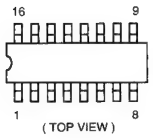

MSP3400C-PS
MSP3410-15
SDA5273CP-GEG

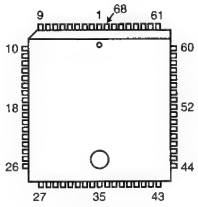

PST593C-MMP-4P

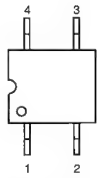

SBX1790-51

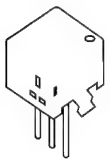

SDA5250M-GEG
DSP56004-FJ

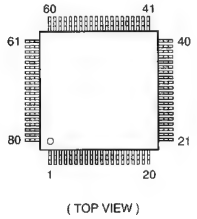

SE135N

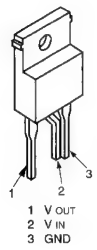

ST24E32M6TR
TDA1387T
TL072CDR

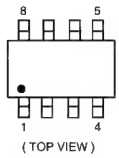

STR-S6709

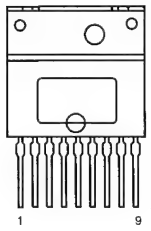

STV9379

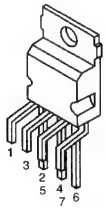

TDA4665T-T

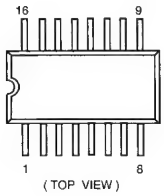

TDA7264

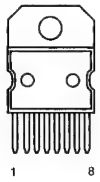

TDA8395T

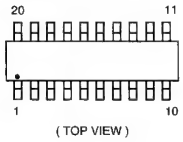

L4941BV
LM78L05ACZ

TMS27PC020-15FML

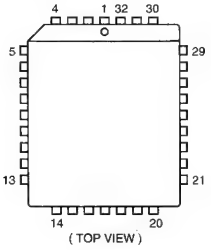

BF871-127

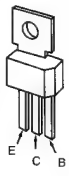

BF421L-AMMO
2SA933AS
2SA933S
2SA1091-O
2SC2389STP-R
2SC2808STP-R

DTA144ES
DTC114ES
DTC143TS
DTC144ES
2SC1740S-RT

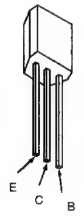

DTC114TK
DTC144EK
2SA1037K
2SA1162-G
2SC2412K

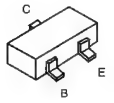

TLP721(D4-)

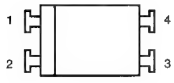

2SA1175-HFE
2SC2785-HFE

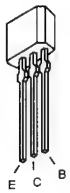

2SA1667
2SA1837
2SC3852A

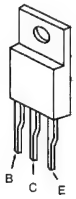

2SC2688-LK

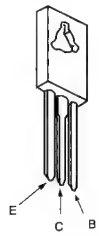

2SC4793

2SC4927-01

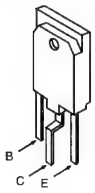

AU-01Z-V1 GP08D
EG-1Z-V1 RGP02
EGP20G RGP10GPKG23
EL1Z RGP15GPKG23
EM1-V1 RU3YX
EU-1-V1 RU4AM-T3
EUZ-V1 RU4DS
FML-G12S

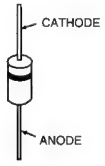

BAS216 1SS355
DTZ9.1 RD5.6S-B
DTZ33B UDZ-TE-17-9.1B
MA8330

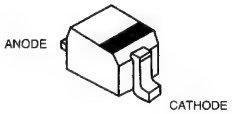

D4SB60L

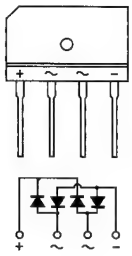

FMS-3FU

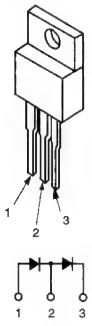

MA3030H(TX)

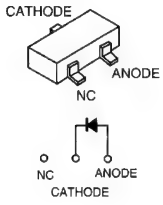

MTZJ-3.6A RD3.9ESB2
MTZJ-3.9B RD5.1ESB2
MTZJ-5.1B RD5.6ESB2
MTZJ-5.6B RD6.2ESB2
MTZJ-6.2B RD6.8ESB2
MTZJ-6.8B RD7.5ESB2
MTZJ-7.5C 1SS133T-77
MTZJ-T-77-9.1A

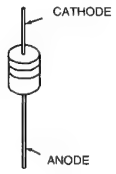

SLA-570KT3F

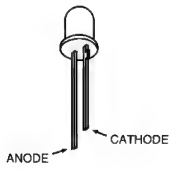

SECTION 6

EXPLODED VIEWS

NOTE :

- Items with no part number and no description are not stocked because they are seldom required for routine service.
- The construction parts of an assembled part are indicated with a collation number in the remarks column.
- Items marked " * " are not stocked since they are seldom required for routine service. Some delay should be anticipated when ordering these items.

The components identified by shading and marked ⚠ are critical for safety.
Replace only with the part number specified.

Les composants identifies par une trame et une marque ⚠ sont critiques pour la securite.
Ne les remplacer que par une piece portant le numero specifie.

6-1. CHASSIS

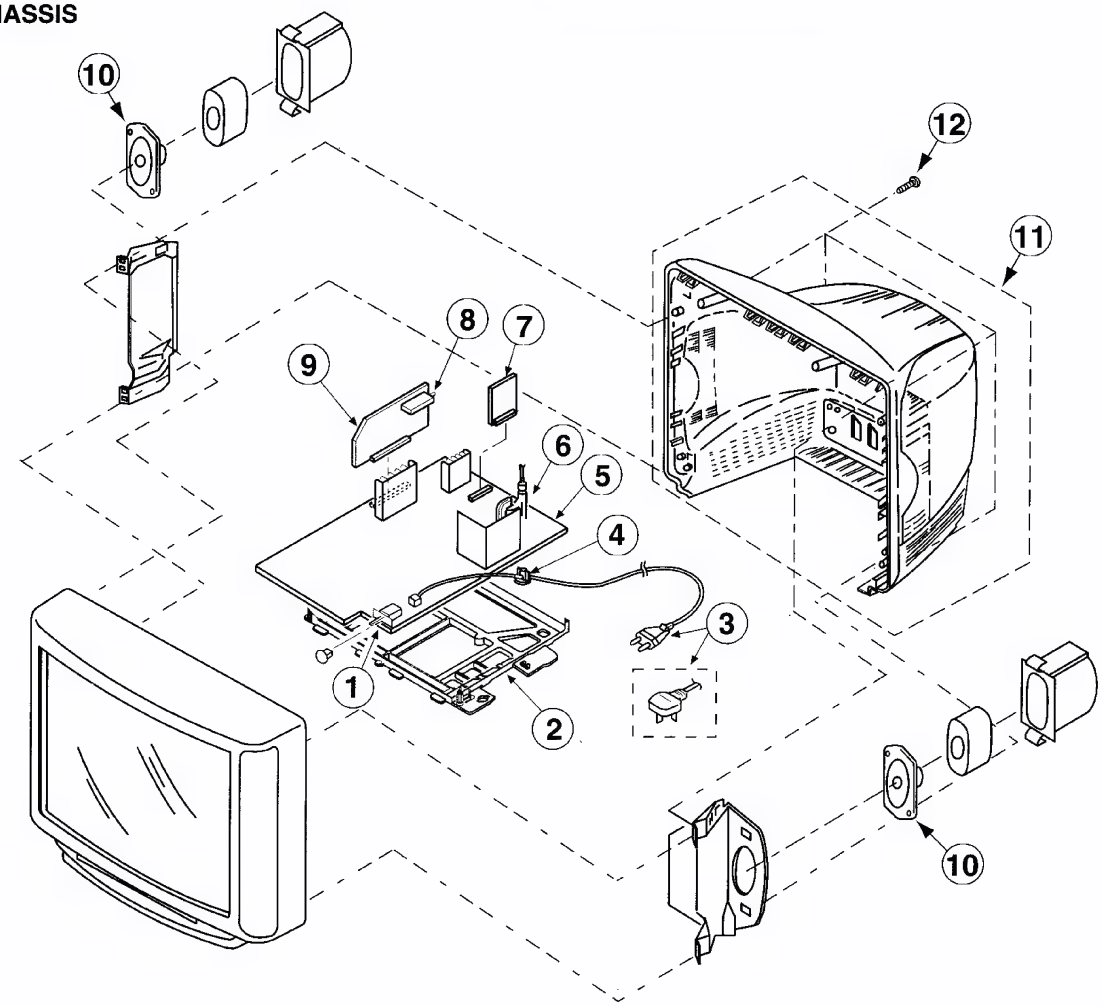

REF NO	PART NO	DESCRIPTION	REMARK
1	⚠ 1-571-433-21	SWITCH, PUSH (AC POWER)	
2	*4-203-315-01	BRACKET, MAIN	
3	⚠ 1-751-680-11	CORD, POWER (WITH NOISE FILTER) 2.5A/250V (KV-29X1A/29X1B/29X1D/29X1E)	
	⚠ 1-690-270-21	CORD, POWER (WITH CONNECTOR) 2.5A/250V (KV-29X1K/29X1R)	
	⚠ 1-776-240-11	CORD, POWER (FILTER) 3A/250V (KV-29X1L/29X1U)	
4	⚠ *4-202-531-01	AC CORD LOCK (SC)	
5	*A-1642-165-A	D BOARD, COMPLETE	
6	⚠ 1-453-169-11	TRANSFORMER ASSY, FLYBACK (UX-1604A2)	
7	*A-1640-214-A	D2 BOARD, COMPLETE	
8	1-693-338-11	TUNER/VIF (AEP) (KV-29X1A/29X1D/29X1E/29X1K/29X1L/29X1R)	
	1-693-340-11	TUNER/VIF (FR) (KV-29X1B)	
	1-693-339-11	TUNER/VIF (UK) (KV-29X1U)	
9	*A-1632-423-A	A BOARD, COMPLETE (KV-29X1A)	
	*A-1632-425-A	A BOARD, COMPLETE (KV-29X1B)	
	*A-1632-422-A	A BOARD, COMPLETE (KV-29X1D)	
	*A-1632-424-A	A BOARD, COMPLETE (KV-29X1E)	
	*A-1632-426-A	A BOARD, COMPLETE (KV-29X1K)	
	*A-1632-433-A	A BOARD, COMPLETE (KV-29X1L)	
	*A-1632-427-A	A BOARD, COMPLETE (KV-29X1R)	
	*A-1632-400-A	A BOARD, COMPLETE (KV-29X1U)	
10	1-544-727-11	SPEAKER (7.5x13CM)	
11	X-4200-257-1	COVER ASSY, REAR (SC)	
12	4-039-358-01	SCREW (4x16), (+) BV TAPPING	

6-2. PICTURE TUBE

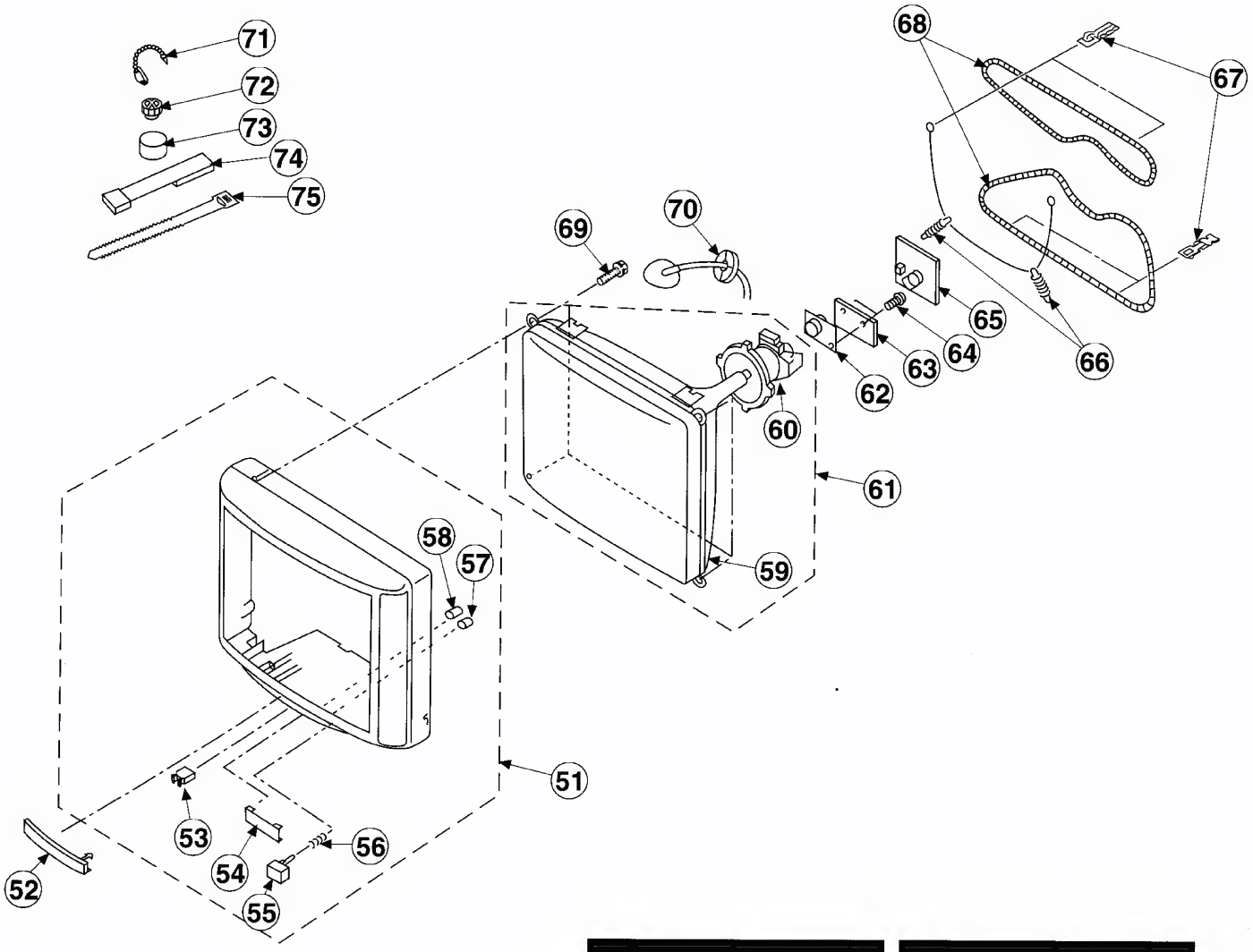

The components identified by shading and marked ! are critical for safety.
Replace only with the part number specified.

Les composants identifies par une trame et une marque ! sont critiques pour la securite.
Ne les remplacer que par une piece portant le numero specifie.

REF NO		PART NO	DESCRIPTION	REMARK
51		X-4200-258-1	BEZNET ASSY	53-58
52		4-203-364-01	DOOR, CONTROL	
53		4-047-464-01	CATCHER, PUSH	
54		4-203-365-01	WINDOW, ORNAMENTAL	
55		4-203-362-01	BUTTON, POWER	
56		4-202-964-01	SPRING	
57		*4-203-363-01	GUIDE, LED LIGHT	
58		4-202-465-01	GUIDE, LED LIGHT	
59	!	8-733-856-05	PICTURE TUBE (SD-269) (M68LCT60X)	
60	!	8-451-467-11	DEFLECTION YOKE (Y29GXA2B)	
61	!	8-733-856-71	ITC	59-60
62	!	8-453-005-11	NECK ASSY (NA297-M)	
63		*A-1644-070-A	VM BOARD, COMPLETE	
64		4-639-357-01	SCREW(3x8), (+) BV TAPPING	
65		*A-1638-082-A	C BOARD, COMPLETE	
66		4-200-433-01	SPRING, EXTENSION	

REF NO		PART NO	DESCRIPTION	REMARK
67		4-202-415-01	CLIP, DGC (29")	
68	!	1-406-807-11	COIL, DEGAUSSING	
69		4-036-188-01	SCREW (M), PT	
70		4-202-693-01	HOLDER, HV CABLE	
71		4-308-870-00	CLIP, LEAD WIRE	
72		1-452-094-00	MAGNET, ROTATABLE DISK; 15MM Ø	
73		1-452-032-00	MAGNET, DISK; 10MM Ø	
74		X-4387-214-1	PERMALLOY ASSY, CORRECTION	
75		3-701-007-00	BAND, BINDING	

SECTION 7

ELECTRICAL PARTS LIST

The components identified by shading and marked ⚠ are critical for safety.
Replace only with the part number specified.

Les composants identifies par une trame et une marque ⚠ sont critiques pour la securite.
Ne les remplacer que par une piece portant le numero specifie.

- Items marked " * " are not stocked since they are seldom required for routine service. Some delay should be anticipated when ordering these items.
- All variable and adjustable resistors have characteristic curve B, unless otherwise noted.

RESISTORS

- All resistors are in ohms
- F : nonflammable

When indicating parts by reference number, please include the board name.

CAPACITORS MF : mF, PF : mmF

COILS MMH : mH, μH : mH

A

REF.NO.	PART NO.	DESCRIPTION		REMARK
	*A-1632-423-A	A BOARD, COMPLETE (KV-29X1A)		
		**********		
	*A-1632-425-A	A BOARD, COMPLETE (KV-29X1B)		
		**********		
	*A-1632-422-A	A BOARD, COMPLETE (KV-29X1D)		
		**********		
	*A-1632-424-A	A BOARD, COMPLETE (KV-29X1E)		
		**********		
	*A-1632-426-A	A BOARD, COMPLETE (KV-29X1K)		
		**********		
	*A-1632-433-A	A BOARD, COMPLETE (KV-29X1L)		
		**********		
	*A-1632-427-A	A BOARD, COMPLETE (KV-29X1R)		
		**********		
	*A-1632-400-A	A BOARD, COMPLETE (KV-29X1U)		
		**********		
	1-750-797-11	SOCKET, PLCC		
		< CAPACITOR >		
C1	1-163-038-00	CERAMIC CHIP 0.1MF		25V
C2	1-126-965-11	ELECT 22MF	20%	50V
C3	1-163-104-00	CERAMIC CHIP 30PF	5%	50V
C4	1-163-104-00	CERAMIC CHIP 30PF	5%	50V
C8	1-163-038-00	CERAMIC CHIP 0.1MF		25V
C10	1-163-243-11	CERAMIC CHIP 47PF	5%	50V
C11	1-163-243-11	CERAMIC CHIP 47PF	5%	50V
C15	1-163-133-00	CERAMIC CHIP 470PF	5%	50V
C18	1-163-038-00	CERAMIC CHIP 0.1MF		25V
C19	1-163-989-11	CERAMIC CHIP 0.033MF	10%	25V
C20	1-164-232-11	CERAMIC CHIP 0.01MF	10%	50V
C21	1-164-232-11	CERAMIC CHIP 0.01MF	10%	50V
C22	1-163-117-00	CERAMIC CHIP 100PF	5%	50V
C40	1-163-989-11	CERAMIC CHIP 0.033MF	10%	25V
C41	1-163-989-11	CERAMIC CHIP 0.033MF	10%	25V
C42	1-163-989-11	CERAMIC CHIP 0.033MF	10%	25V
C43	1-163-121-00	CERAMIC CHIP 150PF	5%	50V
C44	1-163-989-11	CERAMIC CHIP 0.033MF	10%	25V
C45	1-163-038-00	CERAMIC CHIP 0.1MF		25V
C80	1-163-117-00	CERAMIC CHIP 100PF	5%	50V
C81	1-164-005-11	CERAMIC CHIP 0.47MF		25V
C82	1-163-037-11	CERAMIC CHIP 0.022MF	10%	50V
C90	1-163-038-00	CERAMIC CHIP 0.1MF		25V
C101	1-163-038-00	CERAMIC CHIP 0.1MF		25V
C102	1-126-934-11	ELECT 220MF	20%	16V
C103	1-126-965-11	ELECT 22MF	20%	50V
C104	1-163-117-00	CERAMIC CHIP 100PF	5%	50V
C110	1-126-967-11	ELECT 47MF	20%	16V
C112	1-163-141-00	CERAMIC CHIP 0.001MF	5%	50V
C113	1-126-967-11	ELECT 47MF	20%	16V
C120	1-163-117-00	CERAMIC CHIP 100PF	5%	50V
C121	1-163-113-00	CERAMIC CHIP 68PF	5%	50V
C122	1-163-137-00	CERAMIC CHIP 680PF	5%	50V
C123	1-163-113-00	CERAMIC CHIP 68PF	5%	50V
C124	1-137-399-11	FILM 0.1MF	5%	50V
C201	1-163-139-00	CERAMIC CHIP 820PF	10%	50V
C202	1-164-004-11	CERAMIC CHIP 0.1MF	10%	25V
C203	1-126-933-11	ELECT 100MF	20%	16V
C204	1-163-038-00	CERAMIC CHIP 0.1MF		25V
C205	1-126-965-11	ELECT 22MF	20%	50V
C206	1-163-141-00	CERAMIC CHIP 0.001MF	5%	50V
C207	1-164-505-11	CERAMIC CHIP 2.2MF		16V
C208	1-164-505-11	CERAMIC CHIP 2.2MF		16V
C209	1-164-505-11	CERAMIC CHIP 2.2MF		16V
C210	1-216-295-00	METAL GLAZE 0	5%	1/10W
C211	1-164-505-11	CERAMIC CHIP 2.2MF		16V
C212	1-164-346-11	CERAMIC CHIP 1MF		16V
C213	1-163-133-00	CERAMIC CHIP 470PF	5%	50V
C214	1-164-346-11	CERAMIC CHIP 1MF		16V
C215	1-163-133-00	CERAMIC CHIP 470PF	5%	50V
C216	1-126-967-11	ELECT 47MF	20%	16V
C217	1-164-232-11	CERAMIC CHIP 0.01MF	10%	50V
C218	1-126-967-11	ELECT 47MF	20%	16V
C219	1-164-232-11	CERAMIC CHIP 0.01MF	10%	50V
C220	1-164-505-11	CERAMIC CHIP 2.2MF		16V
C221	1-164-505-11	CERAMIC CHIP 2.2MF		16V
C222	1-164-346-11	CERAMIC CHIP 1MF		16V
C223	1-163-133-00	CERAMIC CHIP 470PF	5%	50V
C224	1-164-346-11	CERAMIC CHIP 1MF		16V
C225	1-163-133-00	CERAMIC CHIP 470PF	5%	50V
C226	1-126-967-11	ELECT 47MF	20%	16V
C227	1-164-232-11	CERAMIC CHIP 0.01MF	10%	50V
C228	1-126-967-11	ELECT 47MF	20%	16V
C229	1-164-232-11	CERAMIC CHIP 0.01MF	10%	50V
C230	1-216-295-00	METAL GLAZE 0	5%	1/10W
C231	1-163-038-00	CERAMIC CHIP 0.1MF		25V
C232	1-126-967-11	ELECT 47MF	20%	16V
C251	1-163-087-00	CERAMIC CHIP 4PF	0.25PF	50V
C252	1-163-087-00	CERAMIC CHIP 4PF	0.25PF	50V
C253	1-163-117-00	CERAMIC CHIP 100PF	5%	50V
C254	1-163-109-00	CERAMIC CHIP 47PF	5%	50V
C255	1-163-117-00	CERAMIC CHIP 100PF	5%	50V
C256	1-163-038-00	CERAMIC CHIP 0.1MF		25V

A

REF.NO.	PART NO.	DESCRIPTION			REMARK
C257	1-126-965-11	ELECT	22MF	20%	50V
C258	1-126-964-11	ELECT	10MF	20%	50V
C259	1-164-336-11	CERAMIC CHIP	0.33MF		25V
C260	1-163-038-00	CERAMIC CHIP	0.1MF		25V
C261	1-163-133-00	CERAMIC CHIP	470PF	5%	50V
C262	1-163-133-00	CERAMIC CHIP	470PF	5%	50V
C263	1-163-038-00	CERAMIC CHIP	0.1MF		25V
C264	1-126-962-11	ELECT	3.3MF	20%	50V
C265	1-126-964-11	ELECT	10MF	20%	50V
C266	1-126-964-11	ELECT	10MF	20%	50V
C267	1-126-965-11	ELECT	22MF	20%	50V
C268	1-163-038-00	CERAMIC CHIP	0.1MF		25V
C269	1-163-131-00	CERAMIC CHIP	390PF	5%	50V
C270	1-163-131-00	CERAMIC CHIP	390PF	5%	50V
C271	1-163-141-00	CERAMIC CHIP	0.001MF	5%	50V
C272	1-163-141-00	CERAMIC CHIP	0.001MF	5%	50V
C273	1-163-141-00	CERAMIC CHIP	0.001MF	5%	50V
C274	1-163-141-00	CERAMIC CHIP	0.001MF	5%	50V
C275	1-164-346-11	CERAMIC CHIP	1MF		16V
C276	1-164-346-11	CERAMIC CHIP	1MF		16V
C277	1-164-346-11	CERAMIC CHIP	1MF		16V
C278	1-164-346-11	CERAMIC CHIP	1MF		16V
C279	1-126-965-11	ELECT	22MF	20%	50V
C280	1-163-038-00	CERAMIC CHIP	0.1MF		25V
C281	1-126-965-11	ELECT	22MF	20%	50V
C282	1-163-038-00	CERAMIC CHIP	0.1MF		25V
C300	1-163-109-00	CERAMIC CHIP	47PF	5%	50V
C301	1-163-038-00	CERAMIC CHIP	0.1MF		25V
C302	1-163-141-00	CERAMIC CHIP	0.001MF	5%	50V
C303	1-163-141-00	CERAMIC CHIP	0.001MF	5%	50V
C304	1-163-038-00	CERAMIC CHIP	0.1MF		25V
C305	1-163-038-00	CERAMIC CHIP	0.1MF		25V
C306	1-164-232-11	CERAMIC CHIP	0.01MF	10%	50V
C307	1-164-232-11	CERAMIC CHIP	0.01MF	10%	50V
C308	1-164-232-11	CERAMIC CHIP	0.01MF	10%	50V
C309	1-164-346-11	CERAMIC CHIP	1MF		16V
C310	1-164-346-11	CERAMIC CHIP	1MF		16V
C311	1-164-346-11	CERAMIC CHIP	1MF		16V
C312	1-164-505-11	CERAMIC CHIP	2.2MF		16V
C313	1-163-141-00	CERAMIC CHIP	0.001MF	5%	50V
C315	1-216-295-00	METAL GLAZE	0	5%	1/10W
C317	1-163-038-00	CERAMIC CHIP	0.1MF		25V
C319	1-163-017-00	CERAMIC CHIP	0.0047MF	10%	50V
C320	1-126-965-11	ELECT	22MF	20%	50V
C321	1-164-232-11	CERAMIC CHIP	0.01MF	10%	50V
C322	1-164-004-11	CERAMIC CHIP	0.1MF	10%	25V
C323	1-164-004-11	CERAMIC CHIP	0.1MF	10%	25V
C324	1-164-004-11	CERAMIC CHIP	0.1MF	10%	25V
C325	1-164-346-11	CERAMIC CHIP	1MF		16V
C326	1-163-141-00	CERAMIC CHIP	0.001MF	5%	50V
C327	1-137-374-11	FILM	0.047MF	5%	50V
C328	1-126-964-11	ELECT	10MF	20%	50V
C329	1-164-232-11	CERAMIC CHIP	0.01MF	10%	50V
C330	1-130-777-00	FILM	0.1MF	5%	63V
C331	1-137-581-11	FILM	0.1MF	5%	100V
C332	1-164-232-11	CERAMIC CHIP	0.01MF	10%	50V
C333	1-126-933-11	ELECT	100MF	20%	16V
C334	1-164-232-11	CERAMIC CHIP	0.01MF	10%	50V
C335	1-164-004-11	CERAMIC CHIP	0.1MF	10%	25V
C336	1-163-009-11	CERAMIC CHIP	0.001MF	10%	50V
C337	1-163-009-11	CERAMIC CHIP	0.001MF	10%	50V
C338	1-164-346-11	CERAMIC CHIP	1MF		16V
C339	1-164-232-11	CERAMIC CHIP	0.01MF	10%	50V
C340	1-126-933-11	ELECT	100MF	20%	16V
C341	1-164-005-11	CERAMIC CHIP	0.47MF		25V
C342	1-164-346-11	CERAMIC CHIP	1MF		16V
C343	1-163-017-00	CERAMIC CHIP	0.0047MF	10%	50V
C344	1-163-117-00	CERAMIC CHIP	100PF	5%	50V
C347	1-164-005-11	CERAMIC CHIP	0.47MF		25V
C348	1-163-038-00	CERAMIC CHIP	0.1MF		25V
C350	1-126-964-11	ELECT	10MF	20%	50V
C351	1-164-505-11	CERAMIC CHIP	2.2MF		16V
C352	1-164-005-11	CERAMIC CHIP	0.47MF		25V
C353	1-164-505-11	CERAMIC CHIP	2.2MF		16V
C354	1-164-005-11	CERAMIC CHIP	0.47MF		25V
C355	1-126-965-11	ELECT	22MF	20%	50V
C356	1-164-232-11	CERAMIC CHIP	0.01MF	10%	50V
C357	1-163-133-00	CERAMIC CHIP	470PF	5%	50V
C358	1-164-005-11	CERAMIC CHIP	0.47MF		25V
C359	1-163-231-11	CERAMIC CHIP	15PF	5%	50V
C360	1-163-231-11	CERAMIC CHIP	15PF	5%	50V
C370	1-164-505-11	CERAMIC CHIP	2.2MF		16V (KV-29X1B/29X1D/29X1E/29X1K/29X1R)
C371	1-163-141-00	CERAMIC CHIP	0.001MF	5%	50V
C372	1-164-004-11	CERAMIC CHIP	0.1MF	10%	25V (KV-29X1B/29X1D/29X1E/29X1K/29X1R)
C373	1-164-489-11	CERAMIC CHIP	0.22MF	10%	16V (KV-29X1B/29X1D/29X1E/29X1K/29X1R)

< FILTER >

CF120	1-409-327-00	TRAP, CERAMIC (6.5MHz) (KV-29X1B)

< CONNECTOR >

CN1	1-695-302-11	CONNECTOR, BOARD TO BOARD 50P
CN2	*1-568-880-51	PIN, CONNECTOR 5P
CN201	1-766-296-11	CONNECTOR, DUAL SCART
CN301	*1-568-882-51	PIN, CONNECTOR 7P

< DIODE >

D2	8-719-988-62	DIODE 1SS355
D10	8-719-158-15	DIODE RD5.6S-B
D11	8-719-158-15	DIODE RD5.6S-B
D12	8-719-158-15	DIODE RD5.6S-B
D101	8-719-977-81	DIODE DTZ33B
D201	8-719-977-22	DIODE DTZ9.1
D202	8-719-977-22	DIODE DTZ9.1
D203	8-719-977-22	DIODE DTZ9.1
D204	8-719-977-22	DIODE DTZ9.1
D205	8-719-977-22	DIODE DTZ9.1
D206	8-719-977-22	DIODE DTZ9.1
D207	8-719-977-22	DIODE DTZ9.1
D208	8-719-977-22	DIODE DTZ9.1
D209	8-719-977-22	DIODE DTZ9.1
D210	8-719-977-22	DIODE DTZ9.1
D211	8-719-977-22	DIODE DTZ9.1
D212	8-719-977-22	DIODE DTZ9.1
D213	8-719-977-22	DIODE DTZ9.1
D214	8-719-977-22	DIODE DTZ9.1
D215	8-719-977-22	DIODE DTZ9.1
D216	8-719-158-15	DIODE RD5.6S-B

A

REF.NO.	PART NO.	DESCRIPTION	REMARK
D217	8-719-158-15	DIODE RD5.6S-B	
D218	8-719-158-15	DIODE RD5.6S-B	
D220	8-719-988-62	DIODE 1SS355	
D221	8-719-988-62	DIODE 1SS355	
D222	8-719-977-22	DIODE DTZ9.1	
D223	8-719-977-22	DIODE DTZ9.1	
D224	8-719-977-22	DIODE DTZ9.1	
D225	8-719-977-22	DIODE DTZ9.1	
D226	8-719-977-22	DIODE DTZ9.1	
D227	8-719-977-13	DIODE DTZ6.8C	
D251	8-719-047-16	DIODE BAS216	
D320	8-719-977-22	DIODE DTZ9.1	
D370	8-719-047-16	DIODE BAS216 (KV-29X1B/29X1D/29X1E/29X1K/29X1R)	
		< ENCAPSULATED FILTER >	
FL101	1-236-071-11	ENCAPSULATED COMPONENT	
FL201	1-236-071-11	ENCAPSULATED COMPONENT	
FL202	1-236-071-11	ENCAPSULATED COMPONENT	
FL203	1-236-071-11	ENCAPSULATED COMPONENT	
		< IC >	
IC1	8-759-376-75	IC SDA5250M-GEG	
IC2	8-759-334-20	IC ST24E32M6TR	
IC3	8-759-428-13	IC TMS27PC010A-15FMBE101 (KV-29X1A/29X1B/29X1D/29X1K)	
	8-759-428-12	IC TMS27PC010A-15FMBW101 (KV-29X1E/29X1L/29X1U)	
	8-759-167-62	IC TMS27PC010A-15FML (KV-29X1R)	
IC4	8-759-394-57	IC PST593C-MMP-4P	
IC201	8-752-076-06	IC CXA2040Q-T4	
IC202	8-759-376-56	IC MSP3400C-PS (KV-29X1A/29X1D/29X1K/29X1R)	
	8-759-376-80	IC MSP3410-15 (KV-29X1B/29X1E/29X1L/29X1U)	
IC203	8-759-385-76	IC MC14052BDR2	
IC301	8-752-076-09	IC CXA2000Q-TL	
IC302	8-759-288-85	IC TDA4665T-T	
IC303	8-759-251-56	IC TDA8395T (KV-29X1B/29X1D/29X1E/29X1K/29X1R)	
		< COIL >	
L10	1-410-379-31	INDUCTOR CHIP 6.8UH	
L102	1-408-406-00	INDUCTOR 5.6UH (KV-29X1B)	
L111	1-410-993-11	INDUCTOR CHIP 1UH	
L120	1-408-408-00	INDUCTOR 8.2UH	
L121	1-408-397-00	INDUCTOR 1UH	
L122	1-408-408-00	INDUCTOR 8.2UH	
L300	1-408-607-31	INDUCTOR 22UH	
		< TRANSISTOR >	
Q1	8-729-920-74	TRANSISTOR 2SC2412K-QR	
Q4	8-729-920-74	TRANSISTOR 2SC2412K-QR	
Q5	8-729-920-74	TRANSISTOR 2SC2412K-QR	
Q10	8-729-216-22	TRANSISTOR 2SA1162-G	
Q11	8-729-216-22	TRANSISTOR 2SA1162-G	
Q12	8-729-216-22	TRANSISTOR 2SA1162-G	
Q15	8-729-901-01	TRANSISTOR DTC144EK	
Q16	8-729-901-01	TRANSISTOR DTC144EK	
Q17	8-729-901-01	TRANSISTOR DTC144EK	
Q18	8-729-901-01	TRANSISTOR DTC144EK	

REF.NO.	PART NO.	DESCRIPTION	REMARK
Q80	8-729-920-74	TRANSISTOR 2SC2412K-QR	
Q81	8-729-216-22	TRANSISTOR 2SA1162-G	
Q110	8-729-920-74	TRANSISTOR 2SC2412K-QR	
Q111	8-729-216-22	TRANSISTOR 2SA1162-G	
Q112	8-729-920-74	TRANSISTOR 2SC2412K-QR	
Q113	8-729-216-22	TRANSISTOR 2SA1162-G	
Q114	8-729-216-22	TRANSISTOR 2SA1162-G	
Q120	8-729-920-74	TRANSISTOR 2SC2412K-QR	
Q121	8-729-920-74	TRANSISTOR 2SC2412K-QR (KV-29X1B)	
Q122	8-729-920-74	TRANSISTOR 2SC2412K-QR	
Q124	8-729-920-74	TRANSISTOR 2SC2412K-QR (KV-29X1B)	
Q130	8-729-216-22	TRANSISTOR 2SA1162-G (KV-29X1B)	
Q201	8-729-920-74	TRANSISTOR 2SC2412K-QR	
Q202	8-729-920-74	TRANSISTOR 2SC2412K-QR	
Q203	8-729-920-74	TRANSISTOR 2SC2412K-QR	
Q204	8-729-920-74	TRANSISTOR 2SC2412K-QR	
Q205	8-729-901-01	TRANSISTOR DTC144EK	
Q206	8-729-216-22	TRANSISTOR 2SA1162-G	
Q207	8-729-216-22	TRANSISTOR 2SA1162-G	
Q300	8-729-901-01	TRANSISTOR DTC144EK	
Q304	8-729-920-74	TRANSISTOR 2SC2412K-QR	
Q305	8-729-920-74	TRANSISTOR 2SC2412K-QR	
Q306	8-729-920-74	TRANSISTOR 2SC2412K-QR	
Q330	8-729-216-22	TRANSISTOR 2SA1162-G	
Q331	8-729-920-74	TRANSISTOR 2SC2412K-QR	
Q332	8-729-920-74	TRANSISTOR 2SC2412K-QR	
Q1002	8-729-216-22	TRANSISTOR 2SA1162-G	
		< RESISTOR >	
JR2	1-216-296-00	METAL GLAZE 0 5% 1/8W	
JR101	1-216-295-00	METAL GLAZE 0 5% 1/10W	
JR201	1-216-295-00	METAL GLAZE 0 5% 1/10W	
JR206	1-216-295-00	METAL GLAZE 0 5% 1/10W	
JR207	1-216-295-00	METAL GLAZE 0 5% 1/10W	
JR304	1-216-296-00	METAL GLAZE 0 5% 1/8W	
JR305	1-216-296-00	METAL GLAZE 0 5% 1/8W	
R1	1-216-295-00	METAL GLAZE 0 5% 1/10W	
R2	1-216-025-00	METAL GLAZE 100 5% 1/10W	
R3	1-216-025-00	METAL GLAZE 100 5% 1/10W	
R4	1-216-013-00	METAL GLAZE 33 5% 1/10W	
R5	1-216-065-00	METAL GLAZE 4.7K 5% 1/10W	
R7	1-216-041-00	METAL GLAZE 470 5% 1/10W	
R8	1-216-065-00	METAL GLAZE 4.7K 5% 1/10W	
R9	1-216-041-00	METAL GLAZE 470 5% 1/10W	
R10	1-216-041-00	METAL GLAZE 470 5% 1/10W	
R11	1-216-041-00	METAL GLAZE 470 5% 1/10W	
R12	1-216-041-00	METAL GLAZE 470 5% 1/10W	
R13	1-216-029-00	METAL GLAZE 150 5% 1/10W (KV-29X1A/29X1D/29X1E/29X1K/29X1L/29X1R/29X1U)	
R14	1-216-029-00	METAL GLAZE 150 5% 1/10W (KV-29X1A/29X1D/29X1E/29X1K/29X1L/29X1R/29X1U)	
R15	1-216-029-00	METAL GLAZE 150 5% 1/10W (KV-29X1A/29X1D/29X1E/29X1K/29X1L/29X1R/29X1U)	
R16	1-216-025-91	METAL GLAZE 100 5% 1/10W (KV-29X1A/29X1D/29X1E/29X1K/29X1L/29X1R/29X1U)	

A

REF.NO.	PART NO.	DESCRIPTION				REMARK
R17	1-216-025-91	METAL GLAZE	100	5%	1/10W	(KV-29X1A/29X1D/29X1E/29X1K/29X1L/29X1R/29X1U)
R18	1-216-025-00	METAL GLAZE	100	5%	1/10W	
R19	1-216-025-00	METAL GLAZE	100	5%	1/10W	
R20	1-216-025-00	METAL GLAZE	100	5%	1/10W	
R21	1-216-025-00	METAL GLAZE	100	5%	1/10W	
R24	1-216-065-00	METAL GLAZE	4.7K	5%	1/10W	
R25	1-216-065-00	METAL GLAZE	4.7K	5%	1/10W	
R28	1-216-065-00	METAL GLAZE	4.7K	5%	1/10W	
R29	1-216-065-00	METAL GLAZE	4.7K	5%	1/10W	
R30	1-216-065-00	METAL GLAZE	4.7K	5%	1/10W	
R31	1-216-065-00	METAL GLAZE	4.7K	5%	1/10W	
R32	1-216-025-00	METAL GLAZE	100	5%	1/10W	
R33	1-216-025-00	METAL GLAZE	100	5%	1/10W	
R34	1-216-025-00	METAL GLAZE	100	5%	1/10W	
R35	1-216-025-00	METAL GLAZE	100	5%	1/10W	
R36	1-216-065-00	METAL GLAZE	4.7K	5%	1/10W	
R37	1-216-065-00	METAL GLAZE	4.7K	5%	1/10W	
R38	1-216-065-00	METAL GLAZE	4.7K	5%	1/10W	
R39	1-216-073-00	METAL GLAZE	10K	5%	1/10W	
R40	1-216-067-00	METAL GLAZE	5.6K	5%	1/10W	
R42	1-216-069-00	METAL GLAZE	6.8K	5%	1/10W	
R44	1-216-069-00	METAL GLAZE	6.8K	5%	1/10W	
R46	1-216-095-00	METAL GLAZE	82K	5%	1/10W	
R47	1-216-057-00	METAL GLAZE	2.2K	5%	1/10W	
R48	1-216-121-91	METAL GLAZE	1M	5%	1/10W	
R49	1-216-025-00	METAL GLAZE	100	5%	1/10W	
R50	1-216-065-00	METAL GLAZE	4.7K	5%	1/10W	
R51	1-216-065-00	METAL GLAZE	4.7K	5%	1/10W	
R52	1-216-065-00	METAL GLAZE	4.7K	5%	1/10W	
R53	1-216-065-00	METAL GLAZE	4.7K	5%	1/10W	
R54	1-216-025-00	METAL GLAZE	100	5%	1/10W	
R58	1-216-063-91	METAL GLAZE	3.9K	5%	1/10W	
R59	1-216-025-00	METAL GLAZE	100	5%	1/10W	
R60	1-216-025-00	METAL GLAZE	100	5%	1/10W	
R61	1-216-025-00	METAL GLAZE	100	5%	1/10W	
R62	1-216-025-00	METAL GLAZE	100	5%	1/10W	
R63	1-216-025-00	METAL GLAZE	100	5%	1/10W	
R64	1-216-025-00	METAL GLAZE	100	5%	1/10W	
R65	1-216-025-00	METAL GLAZE	100	5%	1/10W	
R66	1-216-057-00	METAL GLAZE	2.2K	5%	1/10W	
R67	1-216-057-00	METAL GLAZE	2.2K	5%	1/10W	
R69	1-216-025-00	METAL GLAZE	100	5%	1/10W	
R70	1-216-025-00	METAL GLAZE	100	5%	1/10W	
R71	1-216-025-00	METAL GLAZE	100	5%	1/10W	
R72	1-216-025-00	METAL GLAZE	100	5%	1/10W	
R73	1-216-025-00	METAL GLAZE	100	5%	1/10W	
R74	1-216-025-00	METAL GLAZE	100	5%	1/10W	
R75	1-216-025-00	METAL GLAZE	100	5%	1/10W	
R76	1-216-025-00	METAL GLAZE	100	5%	1/10W	
R77	1-216-025-00	METAL GLAZE	100	5%	1/10W	
R78	1-216-025-00	METAL GLAZE	100	5%	1/10W	
R79	1-216-033-00	METAL GLAZE	220	5%	1/10W	
R80	1-216-049-00	METAL GLAZE	1K	5%	1/10W	
R81	1-216-081-00	METAL GLAZE	22K	5%	1/10W	
R82	1-216-065-00	METAL GLAZE	4.7K	5%	1/10W	
R83	1-216-073-00	METAL GLAZE	10K	5%	1/10W	
R84	1-216-081-00	METAL GLAZE	22K	5%	1/10W	
R85	1-216-073-00	METAL GLAZE	10K	5%	1/10W	
R86	1-216-077-00	METAL GLAZE	15K	5%	1/10W	
R87	1-216-081-00	METAL GLAZE	22K	5%	1/10W	
R88	1-216-025-00	METAL GLAZE	100	5%	1/10W	
R91	1-216-025-00	METAL GLAZE	100	5%	1/10W	
R92	1-216-025-00	METAL GLAZE	100	5%	1/10W	
R93	1-216-033-00	METAL GLAZE	220	5%	1/10W	
R94	1-216-033-00	METAL GLAZE	220	5%	1/10W	
R95	1-216-033-00	METAL GLAZE	220	5%	1/10W	
R97	1-216-295-00	METAL GLAZE	0	5%	1/10W	
R98	1-216-295-00	METAL GLAZE	0	5%	1/10W	
R101	1-216-061-00	METAL GLAZE	3.3K	5%	1/10W	
R102	1-216-025-00	METAL GLAZE	100	5%	1/10W	
R103	1-216-025-00	METAL GLAZE	100	5%	1/10W	
R104	1-216-073-00	METAL GLAZE	10K	5%	1/10W	
R105	1-216-113-00	METAL GLAZE	470K	5%	1/10W	
R106	1-216-073-00	METAL GLAZE	10K	5%	1/10W	
R110	1-216-073-00	METAL GLAZE	10K	5%	1/10W	
R111	1-216-029-00	METAL GLAZE	150	5%	1/10W	
R112	1-216-029-00	METAL GLAZE	150	5%	1/10W	
R113	1-216-001-00	METAL GLAZE	10	5%	1/10W	
R114	1-216-029-00	METAL GLAZE	150	5%	1/10W	
R115	1-216-037-00	METAL GLAZE	330	5%	1/10W	
R116	1-216-065-00	METAL GLAZE	4.7K	5%	1/10W	
R117	1-216-055-00	METAL GLAZE	1.8K	5%	1/10W	(KV-29X1A/29X1B/29X1D/29X1E/29X1K/29X1L/29X1R)
	1-216-056-00	METAL GLAZE	2K	5%	1/10W	(KV-29X1U)
R118	1-216-071-00	METAL GLAZE	8.2K	5%	1/10W	
R119	1-216-033-00	METAL GLAZE	220	5%	1/10W	
R120	1-216-069-00	METAL GLAZE	6.8K	5%	1/10W	
R121	1-216-073-00	METAL GLAZE	10K	5%	1/10W	
R122	1-216-041-00	METAL GLAZE	470	5%	1/10W	
R123	1-216-031-00	METAL GLAZE	180	5%	1/10W	
R124	1-216-049-00	METAL GLAZE	1K	5%	1/10W	
R125	1-216-081-00	METAL GLAZE	22K	5%	1/10W	
R126	1-216-025-00	METAL GLAZE	100	5%	1/10W	
R127	1-216-081-00	METAL GLAZE	22K	5%	1/10W	
R128	1-216-035-00	METAL GLAZE	270	5%	1/10W	
R129	1-216-037-00	METAL GLAZE	330	5%	1/10W	
R130	1-216-073-00	METAL GLAZE	10K	5%	1/10W	
R131	1-216-073-00	METAL GLAZE	10K	5%	1/10W	
R132	1-216-025-00	METAL GLAZE	100	5%	1/10W	
R133	1-216-041-00	METAL GLAZE	470	5%	1/10W	
R134	1-216-001-00	METAL GLAZE	10	5%	1/10W	
R135	1-216-045-00	METAL GLAZE	680	5%	1/10W	
R136	1-216-033-00	METAL GLAZE	220	5%	1/10W	
R137	1-216-049-00	METAL GLAZE	1K	5%	1/10W	
R138	1-216-041-00	METAL GLAZE	470	5%	1/10W	
R200	1-216-049-00	METAL GLAZE	1K	5%	1/10W	
R201	1-216-033-00	METAL GLAZE	220	5%	1/10W	
R202	1-216-033-00	METAL GLAZE	220	5%	1/10W	
R203	1-216-025-00	METAL GLAZE	100	5%	1/10W	
R204	1-216-025-00	METAL GLAZE	100	5%	1/10W	
R205	1-216-093-00	METAL GLAZE	68K	5%	1/10W	
R206	1-216-033-00	METAL GLAZE	220	5%	1/10W	
R208	1-216-041-00	METAL GLAZE	470	5%	1/10W	
R209	1-216-049-00	METAL GLAZE	1K	5%	1/10W	
R210	1-216-017-91	METAL GLAZE	47	5%	1/10W	
R211	1-216-033-00	METAL GLAZE	220	5%	1/10W	

A

REF.NO.	PART NO.	DESCRIPTION			REMARK
R212	1-216-022-00	METAL GLAZE	75	5%	1/10W
R213	1-216-022-00	METAL GLAZE	75	5%	1/10W
R214	1-216-025-00	METAL GLAZE	100	5%	1/10W
R216	1-216-025-00	METAL GLAZE	100	5%	1/10W
R217	1-216-113-00	METAL GLAZE	470K	5%	1/10W
R218	1-216-025-00	METAL GLAZE	100	5%	1/10W
R219	1-216-113-00	METAL GLAZE	470K	5%	1/10W
R220	1-216-295-00	METAL GLAZE	0	5%	1/10W
R221	1-216-039-00	METAL GLAZE	390	5%	1/10W
R222	1-216-089-00	METAL GLAZE	47K	5%	1/10W
R223	1-216-295-00	METAL GLAZE	0	5%	1/10W
R224	1-216-039-00	METAL GLAZE	390	5%	1/10W
R225	1-216-089-00	METAL GLAZE	47K	5%	1/10W
R226	1-216-033-00	METAL GLAZE	220	5%	1/10W
R227	1-216-022-00	METAL GLAZE	75	5%	1/10W
R228	1-216-022-00	METAL GLAZE	75	5%	1/10W
R229	1-216-033-00	METAL GLAZE	220	5%	1/10W
R230	1-216-022-00	METAL GLAZE	75	5%	1/10W
R232	1-216-025-00	METAL GLAZE	100	5%	1/10W
R233	1-216-025-00	METAL GLAZE	100	5%	1/10W
R234	1-216-113-00	METAL GLAZE	470K	5%	1/10W
R235	1-216-025-00	METAL GLAZE	100	5%	1/10W
R236	1-216-113-00	METAL GLAZE	470K	5%	1/10W
R237	1-216-295-00	METAL GLAZE	0	5%	1/10W
R238	1-216-089-00	METAL GLAZE	47K	5%	1/10W
R239	1-216-039-00	METAL GLAZE	390	5%	1/10W
R240	1-216-295-00	METAL GLAZE	0	5%	1/10W
R241	1-216-089-00	METAL GLAZE	47K	5%	1/10W
R242	1-216-039-00	METAL GLAZE	390	5%	1/10W
R243	1-216-033-00	METAL GLAZE	220	5%	1/10W
R244	1-216-033-00	METAL GLAZE	220	5%	1/10W
R245	1-216-073-00	METAL GLAZE	10K	5%	1/10W
R246	1-216-053-00	METAL GLAZE	1.5K	5%	1/10W
R247	1-216-053-00	METAL GLAZE	1.5K	5%	1/10W
R249	1-216-001-00	METAL GLAZE	10	5%	1/10W
R255	1-216-025-00	METAL GLAZE	100	5%	1/10W
R256	1-216-025-00	METAL GLAZE	100	5%	1/10W
R270	1-216-022-00	METAL GLAZE	75	5%	1/10W
R271	1-216-022-00	METAL GLAZE	75	5%	1/10W
R272	1-216-022-00	METAL GLAZE	75	5%	1/10W
R273	1-216-022-00	METAL GLAZE	75	5%	1/10W
R280	1-216-049-00	METAL GLAZE	1K	5%	1/10W
R281	1-216-089-00	METAL GLAZE	47K	5%	1/10W
R282	1-216-093-00	METAL GLAZE	68K	5%	1/10W
R283	1-216-049-00	METAL GLAZE	1K	5%	1/10W
R284	1-216-089-00	METAL GLAZE	47K	5%	1/10W
R285	1-216-093-00	METAL GLAZE	68K	5%	1/10W
R286	1-216-049-00	METAL GLAZE	1K	5%	1/10W
R300	1-216-025-00	METAL GLAZE	100	5%	1/10W
R301	1-216-033-00	METAL GLAZE	220	5%	1/10W
R302	1-216-295-00	METAL GLAZE	0	5%	1/10W
R303	1-216-295-00	METAL GLAZE	0	5%	1/10W
R308	1-216-025-00	METAL GLAZE	100	5%	1/10W
R309	1-216-033-00	METAL GLAZE	220	5%	1/10W
R310	1-216-033-00	METAL GLAZE	220	5%	1/10W
R311	1-216-295-00	METAL GLAZE	0	5%	1/10W
R312	1-216-295-00	METAL GLAZE	0	5%	1/10W
R313	1-216-295-00	METAL GLAZE	0	5%	1/10W
R314	1-216-295-00	METAL GLAZE	0	5%	1/10W
R315	1-216-295-00	METAL GLAZE	0	5%	1/10W
R316	1-216-033-00	METAL GLAZE	220	5%	1/10W
R318	1-216-689-11	METAL GLAZE	39K	5%	1/10W
R319	1-216-081-00	METAL GLAZE	22K	5%	1/10W
R320	1-216-025-00	METAL GLAZE	100	5%	1/10W
R321	1-216-025-00	METAL GLAZE	100	5%	1/10W
R322	1-216-025-00	METAL GLAZE	100	5%	1/10W
R323	1-216-033-00	METAL GLAZE	220	5%	1/10W
R324	1-216-063-91	METAL GLAZE	3.9K	5%	1/10W
R326	1-216-025-00	METAL GLAZE	100	5%	1/10W
R327	1-216-025-00	METAL GLAZE	100	5%	1/10W
R328	1-216-129-00	METAL GLAZE	2.2M	5%	1/10W
R329	1-216-089-00	METAL GLAZE	47K	5%	1/10W
R330	1-216-025-00	METAL GLAZE	100	5%	1/10W
R331	1-216-059-00	METAL GLAZE	2.7K	5%	1/10W
R332	1-216-025-00	METAL GLAZE	100	5%	1/10W
R333	1-216-075-00	METAL GLAZE	12K	5%	1/10W
R334	1-216-041-00	METAL GLAZE	470	5%	1/10W
R335	1-208-806-11	METAL CHIP	10K	0.50%	1/10W
R336	1-216-109-00	METAL GLAZE	330K	5%	1/10W
R337	1-216-025-00	METAL GLAZE	100	5%	1/10W
R338	1-216-051-00	METAL GLAZE	1.2K	5%	1/10W
R339	1-216-049-00	METAL GLAZE	1K	5%	1/10W
R340	1-216-025-00	METAL GLAZE	100	5%	1/10W
R341	1-216-025-00	METAL GLAZE	100	5%	1/10W
R342	1-216-049-00	METAL GLAZE	1K	5%	1/10W
R343	1-216-061-00	METAL GLAZE	3.3K	5%	1/10W
R344	1-216-067-00	METAL GLAZE	5.6K	5%	1/10W
R345	1-216-025-00	METAL GLAZE	100	5%	1/10W
R346	1-216-063-91	METAL GLAZE	3.9K	5%	1/10W
R347	1-216-025-00	METAL GLAZE	100	5%	1/10W
R348	1-216-025-00	METAL GLAZE	100	5%	1/10W
R349	1-216-025-00	METAL GLAZE	100	5%	1/10W
R350	1-216-042-00	METAL GLAZE	510	5%	1/10W
R351	1-216-053-00	METAL GLAZE	1.5K	5%	1/10W
R352	1-216-077-00	METAL GLAZE	15K	5%	1/10W
R353	1-216-033-00	METAL GLAZE	220	5%	1/10W
R354	1-216-033-00	METAL GLAZE	220	5%	1/10W
R357	1-216-049-00	METAL GLAZE	1K	5%	1/10W
R370	1-216-295-00	METAL GLAZE	0	5%	1/10W

< TUNER >

TU101	1-693-338-11	TUNER/VIF (AEP) (KV-29X1A/29X1D/29X1E/29X1K/29X1L/29X1R)
	1-693-340-11	TUNER/VIF (FR) (KV-29X1B)
	1-693-339-11	TUNER/VIF (UK) (KV-29X1U)

< CRYSTAL >

X1	1-767-120-21	VIBRATOR, CERAMIC
X201	1-760-628-11	VIBRATOR, CRYSTAL
X301	1-567-504-11	OSCILLATOR, CRYSTAL
X302	1-567-505-11	OSCILLATOR, CRYSTAL
X303	1-767-127-11	VIBRATOR, CERAMIC

IF(KV-29X1A/29X1D/29X1E/29X1K / 29X1L/29X1R/29X1U)

REF.NO.	PART NO.	DESCRIPTION			REMARK
	A-1652-037-A	IF BOARD, COMPLETE (KV-29X1A/29X1D/			
		********** 29X1E/29X1K/			
		29X1L/29X1R)			
	A-1652-038-A	IF BOARD, COMPLETE (KV-29X1U)			
		**********			
		< CAPACITOR >			
C01	1-164-337-11	CERAMIC CHIP 2.2MF			16V
C02	1-164-337-11	CERAMIC CHIP 2.2MF			16V
C03	1-104-957-11	ELECT 47MF		20%	16V
C04	1-135-259-11	TANTAL. CHIP 10MF		20%	6.3V
C05	1-164-004-11	CERAMIC CHIP 0.1MF		10%	25V
C06	1-164-005-11	CERAMIC CHIP 0.47MF			16V
C08	1-164-232-11	CERAMIC CHIP 0.01MF		10%	50V
C09	1-164-004-11	CERAMIC CHIP 0.1MF		10%	25V
C10	1-164-004-11	CERAMIC CHIP 0.1MF		10%	25V
C11	1-164-004-11	CERAMIC CHIP 0.1MF		10%	25V
C15	1-124-282-00	ELECT 22MF		20%	25V
C16	1-162-638-11	CERAMIC CHIP 1MF			16V
C18	1-164-337-11	CERAMIC CHIP 2.2MF			16V
C19	1-124-937-11	ELECT 10MF		20%	16V
		< FILTER >			
CF01	1-404-134-00	TRAP, CERAMIC (5.5MHZ)			
SWF04	1-767-084-11	FILTER, SURFACE WAVE			
		< IC >			
IC01	8-759-385-26	IC TDA4472-CFLG3			
		< COIL >			
L02	1-408-408-00	INDUCTOR 8.2UH			
L04	1-408-419-00	INDUCTOR 68UH			
L08	1-410-992-11	INDUCTOR CHIP 0.82UH			
		< VARIABLE COIL >			
LV01	1-411-874-11	COIL			
		< TRANSISTOR >			
Q01	8-729-216-22	TRANSISTOR 2SA1162-G			
		< RESISTOR >			
JR01	1-216-296-91	METAL GLAZE	0	5%	1/8W
JR02	1-216-296-91	METAL GLAZE	0	5%	1/8W
JR03	1-216-295-00	METAL GLAZE	0	5%	1/10W
JR04	1-216-296-91	METAL GLAZE	0	5%	1/8W
JR05	1-216-295-00	METAL GLAZE	0	5%	1/10W
JR07	1-216-295-00	METAL GLAZE	0	5%	1/10W
R01	1-216-029-00	METAL GLAZE	150	5%	1/10W
R02	1-216-089-91	METAL GLAZE	47K	5%	1/10W
R03	1-216-089-91	METAL GLAZE	47K	5%	1/10W
R04	1-216-057-00	METAL GLAZE	2.2K	5%	1/10W
R05	1-216-081-00	METAL GLAZE	22K	5%	1/10W
R06	1-216-057-00	METAL GLAZE	2.2K	5%	1/10W
R07	1-216-025-91	METAL GLAZE	100	5%	1/10W
R08	1-216-174-00	METAL GLAZE	100	5%	1/8W
R09	1-216-045-00	METAL GLAZE	680	5%	1/10W
R10	1-216-041-00	METAL GLAZE	470	5%	1/10W
R11	1-216-051-00	METAL GLAZE	1.2K	5%	1/10W
R23	1-216-049-91	METAL GLAZE	1K	5%	1/10W
R24	1-216-295-91	METAL GLAZE	0	5%	1/10W
R25	1-216-057-00	METAL GLAZE	2.2K	5%	1/10W
R021	1-216-174-00	METAL GLAZE	100	5%	1/8W
		< VARIABLE RESISTOR >			
RV01	1-226-703-11	RES, ADJ, METAL GLAZE 10K			

IF(KV-29X1B)

REF.NO.	PART NO.	DESCRIPTION			REMARK
	A-1652-036-A	IF BOARD, COMPLETE (KV-29X1B)			
		**********			
		< CAPACITOR >			
C01	1-162-638-11	CERAMIC CHIP 1MF			16V
C02	1-164-337-11	CERAMIC CHIP 2.2MF			16V
C03	1-104-957-11	ELECT 47MF		20%	16V
C04	1-135-259-11	TANTAL. CHIP 10MF		20%	6.3V
C05	1-164-004-11	CERAMIC CHIP 0.1MF		10%	25V
C06	1-164-005-11	CERAMIC CHIP 0.47MF			16V
C08	1-164-232-11	CERAMIC CHIP 0.01MF		10%	50V
C09	1-164-004-11	CERAMIC CHIP 0.1MF		10%	25V
C10	1-164-004-11	CERAMIC CHIP 0.1MF		10%	25V
C11	1-164-004-11	CERAMIC CHIP 0.1MF		10%	25V
C12	1-164-232-11	CERAMIC CHIP 0.01MF		10%	50V
C13	1-164-232-11	CERAMIC CHIP 0.01MF		10%	50V
C14	1-164-232-11	CERAMIC CHIP 0.01MF		10%	50V
C15	1-104-957-11	ELECT 47MF		20%	16V
C16	1-162-638-11	CERAMIC CHIP 1MF			16V
C17	1-163-243-11	CERAMIC CHIP 47PF		5%	50V
C18	1-164-337-11	CERAMIC CHIP 2.2MF			16V
C20	1-124-937-11	ELECT 10MF		20%	16V
C21	1-164-506-11	CERAMIC CHIP 4.7MF			16V
		< FILTER >			
CF01	1-409-430-11	TRAP, CERAMIC			
SWF01	1-579-273-11	FILTER, SURFACE WAVE			
SWF02	1-760-329-11	FILTER, SURFACE WAVE			
SWF03	1-767-083-11	FILTER, SURFACE WAVE			
		< TRIMMER >			
CT01	1-760-662-11	TRAP, CERAMIC			
		< IC >			
IC01	8-759-069-36	IC MC74HC4046AF			
		< COIL >			
L02	1-408-406-00	INDUCTOR 5.6UH			
L04	1-408-419-00	INDUCTOR 68UH			
L05	1-410-987-11	INDUCTOR CHIP 0.33UH			
L06	1-408-399-00	INDUCTOR 1.5UH			
		< VARIABLE COIL >			
LV01	1-411-874-11	COIL			
		< TRANSISTOR >			
Q01	8-729-216-22	TRANSISTOR 2SA1162-G			
Q02	8-729-035-11	TRANSISTOR BF799-GEG			
Q03	8-729-035-11	TRANSISTOR BF799-GEG			
Q04	8-729-901-01	TRANSISTOR DTC144EK			

Les composants identifies par une trame et une marque ⚠ sont critiques pour la securite. Ne les remplacer que par une piece portant le numero specifie.

The components identified by shading and marked ⚠ are critical for safety. Replace only with the part number specified.

IF(KV-29X1B) C

REF.NO.	PART NO.	DESCRIPTION			REMARK
		< RESISTOR >			
JR01	1-216-296-91	METAL GLAZE	0	5% 1/8W	
JR02	1-216-296-91	METAL GLAZE	0	5% 1/8W	
JR03	1-216-295-00	METAL GLAZE	0	5% 1/10W	
JR04	1-216-296-91	METAL GLAZE	0	5% 1/8W	
JR05	1-216-295-00	METAL GLAZE	0	5% 1/10W	
JR07	1-216-295-00	METAL GLAZE	0	5% 1/10W	
R01	1-216-029-00	METAL GLAZE	150	5% 1/10W	
R02	1-216-089-91	METAL GLAZE	47K	5% 1/10W	
R03	1-216-089-91	METAL GLAZE	47K	5% 1/10W	
R04	1-216-057-00	METAL GLAZE	2.2K	5% 1/10W	
R05	1-216-081-00	METAL GLAZE	22K	5% 1/10W	
R06	1-216-057-00	METAL GLAZE	2.2K	5% 1/10W	
R07	1-216-025-91	METAL GLAZE	100	5% 1/10W	
R08	1-216-174-00	METAL GLAZE	100	5% 1/8W	
R09	1-216-045-00	METAL GLAZE	680	5% 1/10W	
R10	1-216-041-00	METAL GLAZE	470	5% 1/10W	
R11	1-216-051-00	METAL GLAZE	1.2K	5% 1/10W	
R12	1-216-063-91	METAL GLAZE	3.9K	5% 1/10W	
R13	1-216-061-00	METAL GLAZE	3.3K	5% 1/10W	
R14	1-216-023-00	METAL GLAZE	82	5% 1/10W	
R15	1-216-017-91	METAL GLAZE	47	5% 1/10W	
R16	1-216-033-00	METAL GLAZE	220	5% 1/10W	
R17	1-216-017-91	METAL GLAZE	47	5% 1/10W	
R18	1-216-013-00	METAL GLAZE	33	5% 1/10W	
R20	1-216-222-00	METAL GLAZE	10K	5% 1/8W	
R23	1-216-049-91	METAL GLAZE	1K	5% 1/10W	
R25	1-216-057-00	METAL GLAZE	2.2K	5% 1/10W	
R21	1-216-174-00	METAL GLAZE	100	5% 1/8W	
		< VARIABLE RESISTOR >			
RV01	1-226-703-11	RES, ADJ, METAL GLAZE 10K			
RV02	1-226-703-11	RES, ADJ, METAL GLAZE 10K			
**********					
	*A-1638-082-A	C BOARD, COMPLETE			
		**********			
		< CAPACITOR >			
C702	1-102-824-00	CERAMIC	470PF	5% 50V	
C703	1-102-116-00	CERAMIC	680PF	10% 50V	
C708	1-162-114-00	CERAMIC	0.0047MF	2KV	
C710	1-107-652-11	ELECT	10MF	20% 250V	
C712	1-102-116-00	CERAMIC	680PF	10% 50V	
C714	1-126-967-11	ELECT	47MF	20% 16V	
C717	1-102-114-00	CERAMIC	470PF	10% 50V	
C718	1-102-114-00	CERAMIC	470PF	10% 50V	
C719	1-102-114-00	CERAMIC	470PF	10% 50V	
C722	1-101-880-00	CERAMIC	47PF	5% 50V	
C723	1-101-880-00	CERAMIC	47PF	5% 50V	
C724	1-101-880-00	CERAMIC	47PF	5% 50V	
		< CONNECTOR >			
CN701	1-778-037-11	PIN, CONNECTOR 6P			
CN702	1-695-915-11	TAB (CONTACT)			
CN703	*1-568-882-51	PIN, CONNECTOR 7P			

REF.NO.	PART NO.	DESCRIPTION			REMARK
		< DIODE >			
D701	8-719-109-72	DIODE RD3.9ES-B2			
D702	8-719-991-33	DIODE 1SS133T-77			
D706	8-719-991-33	DIODE 1SS133T-77			
D707	8-719-991-33	DIODE 1SS133T-77			
D708	8-719-991-33	DIODE 1SS133T-77			
D709	8-719-991-33	DIODE 1SS133T-77			
D710	8-719-991-33	DIODE 1SS133T-77			
D711	8-719-302-43	DIODE EL1Z			
D714	8-719-991-33	DIODE 1SS133T-77			
D715	8-719-991-33	DIODE 1SS133T-77			
D716	8-719-991-33	DIODE 1SS133T-77			
D717	8-719-991-33	DIODE 1SS133T-77			
D718	8-719-991-33	DIODE 1SS133T-77			
D719	8-719-991-33	DIODE 1SS133T-77			
D720	8-719-991-33	DIODE 1SS133T-77			
		< CRT SOCKET >			
J701	1-526-990-22	SOCKET, CRT			
		< COIL >			
L704	1-408-609-41	INDUCTOR	33UH		
		< TRANSISTOR >			
Q702	8-729-119-78	TRANSISTOR 2SC2785-HFE			
Q703	8-729-906-70	TRANSISTOR BF871-127			
Q704	8-729-200-17	TRANSISTOR 2SA1091-O			
Q705	8-729-119-78	TRANSISTOR 2SC2785-HFE			
Q706	8-729-906-70	TRANSISTOR BF871-127			
Q707	8-729-200-17	TRANSISTOR 2SA1091-O			
Q708	8-729-119-78	TRANSISTOR 2SC2785-HFE			
Q709	8-729-906-70	TRANSISTOR BF871-127			
Q710	8-729-200-17	TRANSISTOR 2SA1091-O			
Q711	8-729-173-38	TRANSISTOR 2SA733-K			
		< RESISTOR >			
R704	1-216-486-00	METAL OXIDE	8.2K	5% 3W	F
R705	1-260-103-11	CARBON	2.2K	5% 1/2W	
R706	1-247-815-91	CARBON	220	5% 1/4W	
R707	1-249-408-11	CARBON	180	5% 1/4W	
R709	1-202-844-00	SOLID	330K	10% 1/2W	
R711	1-249-423-11	CARBON	3.3K	5% 1/4W	
R712	1-260-103-11	CARBON	2.2K	5% 1/2W	
R714	1-216-486-00	METAL OXIDE	8.2K	5% 3W	F
R715	1-249-417-11	CARBON	1K	5% 1/4W	
R716	1-247-815-91	CARBON	220	5% 1/4W	
R717	1-249-408-11	CARBON	180	5% 1/4W	
R718	1-202-814-11	SOLID	33K	10% 1/2W	
R720	1-249-423-11	CARBON	3.3K	5% 1/4W	
R722	1-202-848-00	SOLID	680K	10% 1/2W	
R723	1-249-417-11	CARBON	1K	5% 1/4W	
R724	1-202-846-00	SOLID	470K	10% 1/2W	
R726	1-260-103-11	CARBON	2.2K	5% 1/2W	
R727	1-247-815-91	CARBON	220	5% 1/4W	
R728	1-216-350-11	METAL OXIDE	1.2	5% 1W	F
R729	1-249-408-11	CARBON	180	5% 1/4W	
R731	1-249-423-11	CARBON	3.3K	5% 1/4W	
R733	1-249-415-11	CARBON	680	5% 1/4W	
R734	1-247-807-31	CARBON	100	5% 1/4W	
R735	1-249-415-11	CARBON	680	5% 1/4W	

Les composants identifies par une trame et une marque ⚠ sont critiques pour la securite. Ne les remplacer que par une piece portant le numero specifie.

The components identified by shading and marked ⚠ are critical for safety. Replace only with the part number specified.

C D2 D

REF.NO.	PART NO.	DESCRIPTION				REMARK
R736	1-216-486-00	METAL OXIDE	8.2K	5%	3W	F
R739	1-249-417-11	CARBON	1K	5%	1/4W	
R740	1-249-415-11	CARBON	680	5%	1/4W	
R741	1-202-549-00	SOLID	100	20%	1/2W	
R744	1-249-421-11	CARBON	2.2K	5%	1/4W	
R745	1-249-421-11	CARBON	2.2K	5%	1/4W	
R746	1-249-421-11	CARBON	2.2K	5%	1/4W	
R747	1-249-437-11	CARBON	47K	5%	1/4W	
R748	1-249-417-11	CARBON	1K	5%	1/4W	
R749	1-249-435-11	CARBON	33K	5%	1/4W	
		< VARIABLE RESISTOR >				
RV701	1-230-641-11	RES, ADJ, METAL GLAZE 2.2M				
RV702	1-241-656-21	RES, ADJ, METAL FILM 110M				
**********						
	*A-1640-214-A	D2 BOARD, COMPLETE				
		**********				
		< CAPACITOR >				
C1801	1-126-967-11	ELECT	47MF	20%	50V	
C1803	1-137-368-11	FILM	0.0047MF	5%	50V	
C1804	1-126-964-11	ELECT	10MF	20%	50V	
C1807	1-137-366-11	FILM	0.0022MF	5%	50V	
		< CONNECTOR >				
CN1801	1-573-299-21	CONNECTOR, BOARD TO BOARD 10P				
CN1803	*1-568-878-51	PIN, CONNECTOR 3P				
		< DIODE >				
D1802	8-719-110-17	DIODE RD10ESB2				
		< IC >				
IC1801	8-759-701-59	IC MCT7809CT				
IC1802	8-759-603-37	IC M5216P				
		< IC LINK >				
JW1802	1-532-605-91	LINK, IC 0.4A (ICP-E10)				
		< RESISTOR >				
R1807	1-247-883-00	CARBON	150K	5%	1/4W	
R1809	1-249-429-11	CARBON	10K	5%	1/4W	
R1810	1-249-429-11	CARBON	10K	5%	1/4W	
R1811	1-249-429-11	CARBON	10K	5%	1/4W	
R1812	1-249-429-11	CARBON	10K	5%	1/4W	
**********						
	*A-1642-165-A	D BOARD, COMPLETE				
		**********				
	4-201-023-01	SPACER, INSULATING				
	4-202-373-01	SPRING, IC				
		< CAPACITOR >				
C502	1-102-824-00	CERAMIC	470PF	5%	50V	
C503	1-136-165-00	FILM	0.1MF	5%	50V	
C504	1-102-824-00	CERAMIC	470PF	5%	50V	
C506	1-126-941-11	ELECT	470MF	20%	25V	
C507	1-109-953-11	ELECT	2.2MF	20%	50V	

REF.NO.	PART NO.	DESCRIPTION			REMARK
C509	1-136-165-00	FILM	0.1MF	5%	50V
C510	1-126-969-11	ELECT	220MF	20%	50V
C511	1-136-202-11	FILM	0.33MF	5%	63V
C513	1-106-220-00	MYLAR	0.1MF	10%	100V
C514	1-136-165-00	FILM	0.1MF	5%	50V
C515	1-126-941-11	ELECT	470MF	20%	25V
C517	1-126-941-11	ELECT	470MF	20%	25V
C518	1-102-228-00	CERAMIC	470PF	10%	500V
C519	1-102-228-00	CERAMIC	470PF	10%	500V
C520	1-126-941-11	ELECT	470MF	20%	25V
C521	1-124-006-11	ELECT	10MF	20%	25V
C522	1-126-964-11	ELECT	10MF	20%	50V
C523	1-136-165-00	FILM	0.1MF	5%	50V
C600 ⚠	1-113-890-51	ELECT	0.0022MF	20%	250V
C601 ⚠	1-161-964-91	CERAMIC	0.0047MF		250V
C602 ⚠	1-161-964-91	CERAMIC	0.0047MF		250V
C603	1-125-555-11	ELECT	330MF	20%	400V
C604	1-126-968-11	ELECT	100MF	20%	50V
C605	1-107-929-11	ELECT	10MF	20%	100V
C606	1-162-318-11	CERAMIC	0.001MF	10%	500V
C607	1-104-666-11	ELECT	220MF	20%	25V
C608	1-109-880-11	FILM	0.0015MF	3%	2KV
C611	1-102-228-00	CERAMIC	470PF	10%	500V
C612	1-111-160-11	ELECT	22MF	20%	100V
C613	1-124-347-00	ELECT	100MF	20%	160V
C614	1-128-526-11	ELECT	100MF	20%	25V
C615	1-111-067-11	ELECT	0.001F	20%	25V
C616	1-111-067-11	ELECT	0.001F	20%	25V
C617	1-128-339-11	ELECT	2200MF	20%	16V
C618	1-136-165-00	FILM	0.1MF	5%	50V
C619	1-102-228-00	CERAMIC	470PF	10%	500V
C620	1-102-228-00	CERAMIC	470PF	10%	500V
C621	1-136-165-00	FILM	0.1MF	5%	50V
C622	1-104-797-11	ELECT	0.47MF	20%	100V
C623	1-104-666-11	ELECT	220MF	20%	25V
C624	1-136-165-00	FILM	0.1MF	5%	50V
C625	1-126-967-11	ELECT	47MF	20%	50V
C626	1-104-666-11	ELECT	220MF	20%	25V
C628	1-126-964-11	ELECT	10MF	20%	50V
C629	1-111-097-11	ELECT	0.0022F	20%	35V
C630	1-111-097-11	ELECT	0.0022F	20%	35V
C631	1-126-965-11	ELECT	22MF	20%	50V
C632	1-104-666-11	ELECT	220MF	20%	25V
C633 ⚠	1-107-564-11	FILM	0.22MF	20%	300V
C634 ⚠	1-107-564-11	FILM	0.22MF	20%	300V
C635 ⚠	1-107-564-11	FILM	0.22MF	20%	300V
C636 ⚠	1-113-890-51	ELECT	0.0022MF	20%	250V
C640	1-106-220-00	MYLAR	0.1MF	10%	100V
C647	1-162-116-00	CERAMIC	680PF	10%	2KV
C651	1-102-228-00	CERAMIC	470PF	10%	500V
C800	1-137-368-11	FILM	0.0047MF	5%	50V
C801	1-137-372-11	FILM	0.022MF	5%	50V
C802	1-136-153-00	FILM	0.01MF	5%	50V
C804	1-136-165-00	FILM	0.1MF	5%	50V
C805	1-136-207-11	FILM	0.047MF	10%	250V
C806	1-104-999-11	MYLAR	0.1MF	10%	200V
C807	1-136-109-00	FILM	0.68MF	5%	200V
C808	1-137-205-11	FILM	0.1MF	5%	400V
C810	1-107-683-11	ELECT	2.2MF	0	250V
C811	1-102-212-00	CERAMIC	820PF	10%	500V

Les composants identifies par une trame et une marque ⚠ sont critiques pour la securite. Ne les remplacer que par une piece portant le numero specifie.

The components identified by shading and marked ⚠ are critical for safety. Replace only with the part number specified.

D

REF.NO.	PART NO.	DESCRIPTION			REMARK
C812	1-136-125-00	FILM	0.68MF	5%	400V
C813	1-129-722-00	FILM	0.047MF	10%	630V
C814	1-136-565-11	FILM	0.015MF	3%	1.4KV
C815	1-136-562-11	MYLAR	0.0082MF	10%	400V
C816	1-161-754-00	CERAMIC	0.001MF	10%	2KV
C817	1-161-754-00	CERAMIC	0.001MF	10%	2KV
C818	1-162-134-11	CERAMIC	470PF	10%	2KV
C819	1-136-208-11	FILM	0.068MF	10%	250V
C820	1-102-114-00	CERAMIC	470PF	10%	50V
C821	1-162-114-00	CERAMIC	0.0047MF		2KV
C822	1-107-662-11	ELECT	22MF	20%	250V
C824	1-123-024-21	ELECT	33MF		160V
C829	1-124-902-00	ELECT	0.47MF	20%	50V
C830	1-124-902-00	ELECT	0.47MF	20%	50V
C832	1-124-903-11	ELECT	1MF	20%	50V
C834	1-128-551-11	ELECT	22MF	20%	25V
C835	1-162-318-11	CERAMIC	0.001MF	10%	500V
C836	1-162-117-00	CERAMIC	100PF	10%	500V
C838	1-102-228-00	CERAMIC	470PF	10%	500V
C839	1-136-189-00	FILM	0.1MF	10%	250V
C845	1-102-110-00	CERAMIC	220PF	10%	50V
C901	1-101-810-00	CERAMIC	100PF	5%	500V
C902	1-137-372-11	FILM	0.022MF	5%	50V
C903	1-137-372-11	FILM	0.022MF	5%	50V
C904	1-104-665-11	ELECT	100MF	20%	25V
C905	1-126-964-11	ELECT	10MF	20%	50V
C906	1-126-964-11	ELECT	10MF	20%	50V
C907	1-126-964-11	ELECT	10MF	20%	50V
C908	1-126-964-11	ELECT	10MF	20%	50V
C911	1-126-964-11	ELECT	10MF	20%	50V
C913	1-101-810-00	CERAMIC	100PF	5%	500V
C1200	1-136-165-00	FILM	0.1MF	5%	50V
C1201	1-136-173-00	FILM	0.47MF	5%	50V
C1202	1-136-173-00	FILM	0.47MF	5%	50V
C1203	1-136-169-00	FILM	0.22MF	5%	50V
C1204	1-136-169-00	FILM	0.22MF	5%	50V
C1205	1-101-005-00	CERAMIC	0.022MF		50V
C1206	1-101-005-00	CERAMIC	0.022MF		50V
C1207	1-126-933-11	ELECT	100MF	20%	16V
C1208	1-126-963-11	ELECT	4.7MF	20%	50V
C1209	1-126-963-11	ELECT	4.7MF	20%	50V
C1214	1-126-933-11	ELECT	100MF	20%	16V
C1215	1-136-173-00	FILM	0.47MF	5%	50V
C1216	1-137-366-11	FILM	0.0022MF	5%	50V
C1217	1-137-366-11	FILM	0.0022MF	5%	50V
C1218	1-126-934-11	ELECT	220MF	20%	16V

< CONNECTOR >

CN600	⚠ 1-508-786-00	PIN, CONNECTOR (5MM PITCH) 2P	
CN601	⚠ 1-508-765-11	PIN, CONNECTOR (5MM PITCH) 3P	
CN603	⚠ *1-580-844-11	PIN, CONNECTOR (POWER)	
CN800	*1-580-798-11	CONNECTOR PIN (DY) 6P	
CN801	*1-573-296-21	CONNECTOR, BOARD TO BOARD 10P	
CN803	1-695-915-11	TAB (CONTACT)	
CN804	1-778-037-11	PIN, CONNECTOR 6P	
CN807	1-568-878-51	PIN, CONNECTOR 3P	
CN900	1-568-678-11	TERMINAL BLOCK, S 3P	
CN902	1-695-299-11	CONNECTOR, BOARD TO BOARD 50P	
CN1401	*1-568-880-51	PIN, CONNECTOR 5P	
CN1408	*1-568-879-11	PIN, CONNECTOR 4P	
CN1420	*1-568-878-51	PIN, CONNECTOR 3P	

< DIODE >

D500	8-719-109-85	DIODE RD5.1ES-B2	
D502	8-719-979-85	DIODE EGP20G	
D503	8-719-979-85	DIODE EGP20G	
D504	8-719-991-33	DIODE 1SS133T-77	
D505	8-719-982-03	DIODE MTZJ-3.6A	
D506	8-719-991-33	DIODE 1SS133T-77	
D507	8-719-109-85	DIODE RD5.1ES-B2	
D600	8-719-510-53	DIODE D4SB60L	
D601	8-719-046-77	DIODE EM1-V1	
D603	8-719-109-97	DIODE RD6.8ES-B2	
D604	8-719-046-75	DIODE EU-1-V1	
D605	8-719-302-43	DIODE EL1Z	
D606	8-719-302-43	DIODE EL1Z	
D607	8-719-046-78	DIODE EG-1Z-V1	
D608	8-719-312-94	DIODE EU2-V1	
D609	8-719-301-64	DIODE RU4DS	
D610	8-719-046-74	DIODE AU-01Z-V1	
D611	8-719-045-48	DIODE FML-G12S	
D612	8-719-046-76	DIODE RU-3YX-V1	
D613	8-719-045-48	DIODE FML-G12S	
D614	8-719-045-48	DIODE FML-G12S	
D615	8-719-046-75	DIODE EU-1-V1	
D616	8-719-110-03	DIODE RD7.5ESB2	
D617	8-719-991-33	DIODE 1SS133T-77	
D618	8-719-991-33	DIODE 1SS133T-77	
D619	8-719-991-33	DIODE 1SS133T-77	
D620	8-719-991-33	DIODE 1SS133T-77	
D622	8-719-923-60	DIODE MTZJ-T-77-9.1A	
D625	8-719-991-33	DIODE 1SS133T-77	
D626	8-719-046-74	DIODE AU-01Z-V1	
D631	8-719-109-93	DIODE RD6.2ES-B2	
D800	8-719-991-33	DIODE 1SS133T-77	
D801	8-719-991-33	DIODE 1SS133T-77	
D802	8-719-991-33	DIODE 1SS133T-77	
D803	8-719-908-03	DIODE GP08D	
D807	8-719-302-43	DIODE EL1Z	
D808	8-719-908-03	DIODE GP08D	
D809	8-719-018-82	DIODE RGP02-20EL-6394	
D810	8-719-302-43	DIODE EL1Z	
D812	8-719-038-49	DIODE FMS-3FU-LF027-1	
D815	8-719-908-03	DIODE GP08D	
D817	8-719-109-89	DIODE RD5.6ESB2	
D901	8-719-030-11	DIODE SLA-570KT3F	
	*4-203-258-01	HOLDER, LED	
D902	8-719-923-60	DIODE MTZJ-T-77-9.1A	
D903	8-719-923-60	DIODE MTZJ-T-77-9.1A	
D904	8-719-923-60	DIODE MTZJ-T-77-9.1A	
D905	8-719-923-60	DIODE MTZJ-T-77-9.1A	
D906	8-719-923-60	DIODE MTZJ-T-77-9.1A	
D1201	8-719-109-72	DIODE RD3.9ES-B2	

< FUSE >

F601	⚠ 1-576-232-21	FUSE (H.B.C.) 5.0A/250V	
	⚠ 1-533-230-12	HOLDER, FUSE (F601)	

< FERRITE BEAD >

FB600	1-410-397-21	FERRITE BEAD INDUCTOR 1.1UH	

D

Les composants identifies par une trame et une marque ⚠ sont critiques pour la securite. Ne les remplacer que par une piece portant le numero specifie.

The components identified by shading and marked ⚠ are critical for safety. Replace only with the part number specified.

REF.NO.	PART NO.	DESCRIPTION	REMARK
FB601	1-410-397-21	FERRITE BEAD INDUCTOR 1.1UH	
FB602	1-410-397-21	FERRITE BEAD INDUCTOR 1.1UH	
FB604	1-410-396-41	FERRITE BEAD INDUCTOR 0.45UH	
FB605	1-410-396-41	FERRITE BEAD INDUCTOR 0.45UH	
FB606	1-410-397-21	FERRITE BEAD INDUCTOR 1.1UH	
FB607	1-410-397-21	FERRITE BEAD INDUCTOR 1.1UH	
FB608	1-410-396-41	FERRITE BEAD INDUCTOR 0.45UH	
FB800	1-410-396-41	FERRITE BEAD INDUCTOR 0.45UH	
		< IC >	
IC500	8-759-192-71	IC STV9379	
IC600	8-749-010-84	IC STR-S6708	
IC601	8-749-924-92	IC TLP721(D4-)	
IC602	8-749-920-61	IC SE-135N	
IC603	8-759-144-82	IC µPC2405HF	
IC604	8-759-366-13	IC L4941BV	
IC606	8-759-267-25	IC LM2940T-9.0	
IC800	8-759-103-93	IC µPC393P	
IC900	8-747-905-11	RAY CATCHER ELEMENT SBX1790-51	
IC1200	8-759-250-68	IC TDA7264	
IC1201	8-759-502-21	IC TDA2822M	
		< JACK >	
J900	1-764-606-11	JACK	
		< COIL >	
L502	1-412-519-11	INDUCTOR 3.3UH	
L503	1-412-519-11	INDUCTOR 3.3UH	
L609	1-412-533-21	INDUCTOR 47UH	
L611	1-412-527-11	INDUCTOR 15UH	
L612	1-412-522-41	INDUCTOR 5.6UH	
L613	1-412-522-41	INDUCTOR 5.6UH	
L615	1-412-529-11	INDUCTOR 22UH	
L616	1-412-533-21	INDUCTOR 47UH	
L801	1-459-111-00	COIL, DRAM CORE (CDI)	
L802	1-459-104-00	COIL, WITH CORE	
L803	1-420-872-00	COIL, AIR CORE	
L804	1-406-903-11	COIL, HORIZONTAL LINEARITY	
L805	1-406-675-11	COIL, CHOKE 4.7MMH	
L809	1-412-533-21	INDUCTOR 47UH	
L811	1-406-979-11	COIL, CHOKE 220UH	
L813	1-412-552-11	INDUCTOR 2.2MMH	
L901	1-408-603-31	INDUCTOR 10UH	
L902	1-408-603-31	INDUCTOR 10UH	
L903	1-408-409-00	INDUCTOR 10UH	
L904	1-408-409-00	INDUCTOR 10UH	
		< IC LINK >	
PS600 ⚠	1-532-686-91	LINK, IC 2.7A (ICP-F75)	
PS601 ⚠	1-532-686-91	LINK, IC 2.7A (ICP-F75)	
PS602 ⚠	1-532-686-91	LINK, IC 2.7A (ICP-F75)	
PS603 ⚠	1-532-686-91	LINK, IC 2.7A (ICP-F75)	
		< TRANSISTOR >	
Q501	8-729-119-78	TRANSISTOR 2SC2785-HFE	
Q502	8-729-119-76	TRANSISTOR 2SA1175-HFE	
Q503	8-729-900-89	TRANSISTOR DTC144ES	
Q601	8-729-025-04	TRANSISTOR 2SC3852A	
Q602	8-729-320-28	TRANSISTOR 2SA1667	
Q603	8-729-802-78	TRANSISTOR 2SC3502-E	
Q604	8-729-024-35	TRANSISTOR 2SC2808STP-R	
Q605	8-729-119-78	TRANSISTOR 2SC2785-HFE	
Q606	8-729-900-65	TRANSISTOR DTA144ES	
Q607	8-729-119-78	TRANSISTOR 2SC2785-HFE	
Q800	8-729-119-78	TRANSISTOR 2SC2785-HFE	
Q801	8-729-017-06	TRANSISTOR 2SC4793	
Q802	8-729-016-32	TRANSISTOR 2SC4927-01	
Q803	8-729-119-80	TRANSISTOR 2SC2688-LK	
Q805	8-729-900-89	TRANSISTOR DTC144ES	
Q900	8-729-119-78	TRANSISTOR 2SC2785-HFE	
Q1200	8-729-119-78	TRANSISTOR 2SC2785-HFE	
Q1201	8-729-900-74	TRANSISTOR DTC143TS	
Q1202	8-729-900-80	TRANSISTOR DTC114ES	
Q1203	8-729-900-74	TRANSISTOR DTC143TS	
Q1204	8-729-900-74	TRANSISTOR DTC143TS	
		< RESISTOR >	
R500	1-215-457-00	METAL 33K 1% 1/4W	
R502	1-249-421-11	CARBON 2.2K 5% 1/4W	
R503	1-249-429-11	CARBON 10K 5% 1/4W	
R504	1-215-455-00	METAL 27K 1% 1/4W	
R505	1-249-382-11	CARBON 1.2 5% 1/4W	F
R506	1-215-439-00	METAL 5.6K 1% 1/4W	
R507	1-215-888-00	METAL OXIDE 220 5% 2W	F
R508	1-216-371-00	METAL OXIDE 1.5 5% 2W	F
R509	1-249-443-11	CARBON 0.47 5% 1/4W	F
R510	1-249-443-11	CARBON 0.47 5% 1/4W	F
R520	1-215-457-00	METAL 33K 1% 1/4W	
R521	1-215-455-00	METAL 27K 1% 1/4W	
R522	1-247-863-91	CARBON 22K 5% 1/4W	
R523	1-247-863-91	CARBON 22K 5% 1/4W	
R524	1-249-425-11	CARBON 4.7K 5% 1/4W	
R525	1-249-425-11	CARBON 4.7K 5% 1/4W	
R526	1-249-421-11	CARBON 2.2K 5% 1/4W	
R527	1-215-437-00	METAL 4.7K 1% 1/4W	
R600	1-216-490-11	METAL OXIDE 39K 5% 3W	F
R601	1-249-417-11	CARBON 1K 5% 1/4W	
R602	1-215-473-00	METAL 150K 1% 1/4W	
R603	1-215-898-11	METAL OXIDE 10K 5% 2W	F
R604	1-249-420-11	CARBON 1.8K 5% 1/4W	
R605	1-216-362-11	METAL OXIDE 0.27 5% 2W	F
R607	1-216-421-11	METAL OXIDE 12 5% 1W	F
R608	1-216-365-00	METAL OXIDE 0.47 5% 2W	F
R610	1-215-421-00	METAL 1K 1% 1/4W	
R611	1-216-354-11	METAL OXIDE 2.7 5% 1W	F
R612	1-249-428-11	CARBON 8.2K 5% 1/4W	
R613	1-249-417-11	CARBON 1K 5% 1/4W	
R614	1-215-877-11	METAL OXIDE 22K 5% 1W	F
R615	1-249-435-11	CARBON 33K 5% 1/4W	
R616	1-215-471-00	METAL 120K 1% 1/4W	
R617	1-215-901-00	METAL OXIDE 33K 5% 2W	F
R618	1-247-863-91	CARBON 22K 5% 1/4W	
R619	1-216-425-11	METAL OXIDE 56 5% 1W	F
R620	1-260-131-11	CARBON 470K 5% 1/2W	
R621	1-216-425-11	METAL OXIDE 56 5% 1W	F
R622	1-249-437-11	CARBON 47K 5% 1/4W	
R623	1-249-429-11	CARBON 10K 5% 1/4W	
R624	1-249-393-11	CARBON 10 5% 1/4W	F
R625	1-249-434-11	CARBON 27K 5% 1/4W	
R626	1-249-430-11	CARBON 12K 5% 1/4W	

Les composants identifies par une trame et une marque ⚠ sont critiques pour la securite. Ne les remplacer que par une piece portant le numero specifie.

The components identified by shading and marked ⚠ are critical for safety. Replace only with the part number specified.

D VM

REF.NO.	PART NO.	DESCRIPTION				REMARK
R627	1-216-347-11	METAL OXIDE	0.68	5%	1W	F
R628	1-249-415-11	CARBON	680	5%	1/4W	F
R629 ⚠	1-244-945-91	CARBON	1M	5%	1/2W	
R630 ⚠	1-218-265-21	METAL	8.2M	5%	1W	
R631 ⚠	1-205-949-11	WIREWOUND	1.8	5%	10W	
R632	1-247-807-31	CARBON	100	5%	1/4W	
R633	1-247-807-31	CARBON	100	5%	1/4W	
R634	1-249-397-11	CARBON	22	5%	1/4W	F
R635	1-249-437-11	CARBON	47K	5%	1/4W	
R636	1-249-417-11	CARBON	1K	5%	1/4W	
R637	1-247-815-91	CARBON	220	5%	1/4W	
R638	1-247-863-91	CARBON	22K	5%	1/4W	
R639	1-215-439-00	METAL	5.6K	1%	1/4W	
R642 ⚠	1-205-949-11	WIREWOUND	1.8	5%	10W	
R645	1-249-422-11	CARBON	2.7K	5%	1/4W	
R646	1-249-377-11	CARBON	0.47	5%	1/4W	F
R647	1-202-933-61	FUSIBLE	0.1	10%	1/2W	F
R800	1-249-421-11	CARBON	2.2K	5%	1/4W	
R802	1-247-863-91	CARBON	22K	5%	1/4W	
R803	1-249-424-11	CARBON	3.9K	5%	1/4W	
R805	1-249-429-11	CARBON	10K	5%	1/4W	
R809	1-249-441-11	CARBON	100K	5%	1/4W	
R812	1-249-421-11	CARBON	2.2K	5%	1/4W	
R813	1-215-867-00	METAL OXIDE	470	5%	1W	F
R814	1-249-411-11	CARBON	330	5%	1/4W	
R816	1-215-917-11	METAL OXIDE	1K	5%	3W	F
R817	1-216-481-11	METAL OXIDE	1.2K	5%	3W	F
R818	1-215-882-00	METAL OXIDE	22	5%	2W	F
R819	1-216-345-11	METAL OXIDE	0.47	5%	1W	F
R820	1-249-403-11	CARBON	68	5%	1/4W	
R821	1-215-909-11	METAL OXIDE	47	5%	3W	F
R822	1-215-868-00	METAL OXIDE	680	5%	1W	F
R824	1-249-420-11	CARBON	1.8K	5%	1/4W	
R826	1-247-752-11	CARBON	1K	5%	1/2W	
R827	1-249-425-11	CARBON	4.7K	5%	1/4W	
R828	1-249-430-11	CARBON	12K	5%	1/4W	
R829	1-249-493-11	CARBON	56K	5%	1/2W	
R830	1-217-778-11	FUSIBLE	1K	5%	1W	F
R833	1-247-887-00	CARBON	220K	5%	1/4W	
R835	1-216-471-11	METAL OXIDE	27	5%	3W	F
R836	1-249-439-11	CARBON	68K	5%	1/4W	
R837	1-249-427-11	CARBON	6.8K	5%	1/4W	
R840	1-247-807-31	CARBON	100	5%	1/4W	
R841	1-249-418-11	CARBON	1.2K	5%	1/4W	
R842	1-249-425-11	CARBON	4.7K	5%	1/4W	
R843	1-249-441-11	CARBON	100K	5%	1/4W	
R846	1-247-885-00	CARBON	180K	5%	1/4W	
R847	1-247-895-91	CARBON	470K	5%	1/4W	
R848	1-247-863-91	CARBON	22K	5%	1/4W	
R849	1-249-429-11	CARBON	10K	5%	1/4W	
R850	1-249-425-11	CARBON	4.7K	5%	1/4W	
R851	1-215-898-11	METAL OXIDE	10K	5%	2W	F
R852	1-249-432-11	CARBON	18K	5%	1/4W	
R900	1-247-815-91	CARBON	220	5%	1/4W	
R901	1-247-734-11	CARBON	39	5%	1/2W	
R902	1-247-734-11	CARBON	39	5%	1/2W	
R904	1-249-389-11	CARBON	4.7	5%	1/4W	F
R905	1-247-804-11	CARBON	75	5%	1/4W	
R906	1-247-804-11	CARBON	75	5%	1/4W	
R907	1-247-804-11	CARBON	75	5%	1/4W	
R908	1-249-401-11	CARBON	47	5%	1/4W	
R909	1-249-429-11	CARBON	10K	5%	1/4W	
R910	1-249-422-11	CARBON	2.7K	5%	1/4W	
R911	1-249-426-11	CARBON	5.6K	5%	1/4W	
R912	1-249-429-11	CARBON	10K	5%	1/4W	
R913	1-247-863-91	CARBON	22K	5%	1/4W	
R914	1-249-437-11	CARBON	47K	5%	1/4W	
R919	1-249-437-11	CARBON	47K	5%	1/4W	
R921	1-249-437-11	CARBON	47K	5%	1/4W	
R922	1-247-807-31	CARBON	100	5%	1/4W	
R923	1-249-412-11	CARBON	390	5%	1/4W	
R1200	1-249-425-11	CARBON	4.7K	5%	1/4W	
R1201	1-249-434-11	CARBON	27K	5%	1/4W	
R1202	1-249-389-11	CARBON	4.7	5%	1/4W	F
R1203	1-249-421-11	CARBON	2.2K	5%	1/4W	
R1204	1-249-421-11	CARBON	2.2K	5%	1/4W	
R1205	1-249-428-11	CARBON	8.2K	5%	1/4W	
R1206	1-249-428-11	CARBON	8.2K	5%	1/4W	
R1208	1-212-849-00	FUSIBLE	4.7	5%	1/4W	F
R1209	1-212-849-00	FUSIBLE	4.7	5%	1/4W	F
R1211	1-249-424-11	CARBON	3.9K	5%	1/4W	
R1212	1-249-424-11	CARBON	3.9K	5%	1/4W	
R1213	1-249-421-11	CARBON	2.2K	5%	1/4W	
R1216	1-249-413-11	CARBON	470	5%	1/4W	
R1217	1-249-425-11	CARBON	4.7K	5%	1/4W	

< RELAY >

RY600 ⚠	1-755-018-11	RELAY	

< SWITCH >

S601 ⚠	1-571-433-21	SWITCH, PUSH (AC POWER)	
S900	1-692-979-11	SWITCH, TACTILE	
S901	1-692-979-11	SWITCH, TACTILE	
S902	1-692-979-11	SWITCH, TACTILE	

< SPARK GAP >

SG801	1-519-422-11	GAP, SPARK	

< TRANSFORMER >

LF600 ⚠	1-421-776-11	LFT	
LF601 ⚠	1-421-776-11	LFT	
T601 ⚠	1-429-605-11	TRANSFORMER, CONVERTER	
T800	1-424-545-11	TRANSFORMER, FERRITE (PMT)	
T803 ⚠	1-453-169-11	TRANSFORMER ASSY, FLYBACK (UX-1604A2)	
T804	1-437-090-31	HDT	

< THERMISTOR >

THP600 ⚠	1-809-827-11	THERMISTOR, POSITIVE	

****

	*A-1644-070-A	VM BOARD, COMPLETE	
		**********	
	*4-368-683-11	SPRING, TRANSISTOR	
	*4-368-683-21	SPRING, TRANSISTOR	

< CAPACITOR >

C1701	1-126-933-11	ELECT	100MF	20%	16V
C1702	1-128-551-11	ELECT	22MF	20%	25V

Les composants identifies par une trame et une marque ⚠ sont critiques pour la securite. Ne les remplacer que par une piece portant le numero specifie.

The components identified by shading and marked ⚠ are critical for safety. Replace only with the part number specified.

VM

REF.NO.	PART NO.	DESCRIPTION			REMARK
C1703	1-126-933-11	ELECT	100MF	20%	16V
C1704	1-107-357-11	FILM	0.47MF	5%	100V
C1705	1-107-638-11	ELECT	33MF	20%	160V
C1706	1-104-999-11	FILM	0.1MF	5%	200V
C1707	1-137-397-11	FILM	0.047MF	5%	100V
C1708	1-137-364-11	FILM	0.001MF	5%	50V
C1709	1-137-364-11	FILM	0.001MF	5%	50V
C1710	1-102-074-00	CERAMIC	0.001MF	10%	50V
C1720	1-107-667-11	ELECT	2.2MF	20%	160V
C1721	1-137-397-11	FILM	0.047MF	5%	100V
C1722	1-126-934-11	ELECT	220MF	20%	16V
C1723	1-161-830-00	CERAMIC	0.0047MF		500V
C1725	1-128-551-11	ELECT	22MF	20%	25V
C1726	1-126-934-11	ELECT	220MF	20%	16V
		< CONNECTOR >			
CN1015	*1-568-880-51	PIN, CONNECTOR 5P			
CN1718	1-774-418-11	CONNECTOR, BOARD TO BOARD 8P			
		< DIODE >			
D1701	8-719-991-33	DIODE 1SS133T-77			
D1702	8-719-110-88	DIODE RD39ES-B2			
D1703	8-719-110-88	DIODE RD39ES-B2			
		< COIL >			
L1701	1-408-409-00	INDUCTOR	10UH		
L1702	1-408-403-00	INDUCTOR	3.3UH		
L1703	1-408-409-00	INDUCTOR	10UH		
L1704	1-408-418-00	INDUCTOR	56UH		
L1705	1-408-418-00	INDUCTOR	56UH		
		< TRANSISTOR >			
Q1701	8-729-119-78	TRANSISTOR 2SC2785-HFE			
Q1702	8-729-119-78	TRANSISTOR 2SC2785-HFE			
Q1703	8-729-017-05	TRANSISTOR 2SA1837			
Q1704	8-729-119-78	TRANSISTOR 2SC2785-HFE			
Q1706	8-729-017-06	TRANSISTOR 2SC4793			
Q1708	8-729-119-78	TRANSISTOR 2SC2785-HFE			
Q1709	8-729-119-78	TRANSISTOR 2SC2785-HFE			
		< RESISTOR >			
R1701	1-249-417-11	CARBON	1K	5% 1/4W	
R1702	1-249-417-11	CARBON	1K	5% 1/4W	
R1703	1-249-421-11	CARBON	2.2K	5% 1/4W	
R1704	1-249-415-11	CARBON	680	5% 1/4W	
R1705	1-247-815-91	CARBON	220	5% 1/4W	
R1706	1-247-815-91	CARBON	220	5% 1/4W	
R1708	1-249-412-11	CARBON	390	5% 1/4W	
R1712	1-260-311-11	CARBON	39	5% 1/2W	
R1713	1-249-384-11	CARBON	1.8	5% 1/4W	F
R1714	1-249-414-11	CARBON	560	5% 1/4W	F
R1715	1-249-432-11	CARBON	18K	5% 1/4W	
R1716	1-249-417-11	CARBON	1K	5% 1/4W	F
R1717	1-216-476-11	METAL OXIDE	180	5% 3W	F
R1718	1-249-432-11	CARBON	18K	5% 1/4W	
R1719	1-249-384-11	CARBON	1.8	5% 1/4W	F
R1720	1-249-400-11	CARBON	39	5% 1/4W	F
R1721	1-249-414-11	CARBON	560	5% 1/4W	
R1722	1-249-401-11	CARBON	47	5% 1/4W	
R1724	1-249-400-11	CARBON	39	5% 1/4W	
R1725	1-216-451-11	METAL OXIDE	120	5% 2W	F
R1728	1-249-413-11	CARBON	470	5% 1/4W	
R1729	1-249-413-11	CARBON	470	5% 1/4W	
R1730	1-249-422-11	CARBON	2.7K	5% 1/4W	
R1731	1-249-411-11	CARBON	330	5% 1/4W	

****

MISCELLANEOUS
****

⚠	1-406-807-11	COIL, DEGAUSSING	
	1-452-032-00	MAGNET, DISK; 10MM Ø	
	1-452-094-00	MAGNET, ROTATABLE DISK; 15MM Ø	
⚠	1-453-169-11	TRANSFORMER ASSY, FLYBACK(NX-1604A2)	
	1-544-727-11	SPEAKER (7.5x13CM)	
⚠	1-571-433-21	SWITCH, PUSH (AC POWER)	
	1-693-338-11	TUNER/VIF (AEP) (KV-29X1A/29X1D/29X1E/29X1K/29X1L/29X1R)	
	1-693-340-11	TUNER/VIF (FR) (KV-29X1B)	
	1-693-339-11	TUNER/VIF (UK) (KV-29X1U)	
⚠	1-751-680-11	CORD, POWER (WITH NOISE FILTER) 2.5A/250V (KV-29X1A/29X1B/29X1D/29X1E)	
⚠	1-690-270-21	CORD, POWER (WITH CONNECTOR) 2.5A/250V (KV-29X1K/29X1R)	
⚠	1-776-204-11	CORD, POWER (FILTER) 3A/250V (KV-29X1L/29X1U)	
⚠	8-451-467-12	DEFLECTION YOKE (Y29GXA2B)	
⚠	8-453-005-11	NECK ASSY, PICTURE TUBE (NA-297-M)	
V901 ⚠	8-733-856-05	PICTURE TUBE (SD-269)(M68LCT60X)	
⚠	8-733-856-71	LTC	

****

ACCESSORIES AND PACKING MATERIALS
****

*4-042-128-01	INDIVIDUAL CARTON	
*4-042-127-01	CUSHION (LOWER) (ASSY)	
*4-042-126-01	CUSHION (UPPER) (ASSY)	
4-203-366-41	MANUAL, INSTRUCTION (KV-29X1A)	(ITALIAN)
4-203-366-51	MANUAL, INSTRUCTION (KV-29X1B)	(FRENCH/GERMAN/ITALIAN/DUTCH)
4-203-366-11	MANUAL, INSTRUCTION (KV-29X1D)	(DUTCH/GREEK/ENGLISH/GERMAN/TURKISH)
4-203-372-11	MANUAL, INSTRUCTION (KV-29X1D)	(ENGLISH/DUTCH)
4-203-366-71	MANUAL, INSTRUCTION (KV-29X1E)	(SPANISH)
4-203-366-81	MANUAL, INSTRUCTION (KV-29X1E)	(PORTUGUESE/FINNISH/DANISH/NORWEGIAN/SWEDISH)
4-203-366-91	MANUAL, INSTRUCTION (KV-29X1K/29X1R)	(CZECH/ENGLISH/POLISH/BULGARIAN/RUSSIAN)
4-203-366-61	MANUAL, INSTRUCTION (KV-29X1L/29X1U)	(ENGLISH)
*4-395-957-01	BAG, PROTECTION	

REMOTE COMMANDER
****

1-473-693-11	COMMANDER, STANDARD TYPE (RM-839)	

****